AM/FM STEREO RECEIVER

SX-1250

<ART-158-0>

Service Manual

PIONEER®

4. CIRCUIT DESCRIPTIONS

4.1 TUNER SECTION

FM Front End

The FM front end is composed of a tuning circuit employing a 5-gang variable capacitor, a 2-stage RF amplifier and mixer employing dual gate MOS FETs, and a local oscillator with buffer. An equivalent of a cascode amplifier is produced by AC grounding gate-2 of the dual gate MOS FET, allowing stable RF amplification at high gain.

The output signal of the RF amplifier is applied to gate-1 of the mixer stage MOS FET, while the local oscillator output signal is applied to gate-2. This technique minimizes input power from the local oscillator, resulting in low mutual interference even if the received signal input level is high.

A variation of a Clapp circuit forms the local oscillator. Inclusion of a buffer amplifier between local oscillator and mixer reduces local oscillator load, eliminating distortion of the oscillation waveform. Drawing effect of the local oscillator is also eliminated.

FM IF Section

Four integrated circuits (ICs) and four dual element ceramic filters compose this section. HA1201 (diagram on page 56) is a differential amplifier with a constant current source and functions as a current-limiting limiter. HA1137 (diagram on page 55) contains IF limiter amplifier, quadrature detector, meter drive and muting circuits. The detector circuit contained within this IC is not used in the SX-1250 however, and instead the IF signal is taken from the stage prior to the detector and applied to TA7061AP. This latter IC is a 3-stage differential amplifier (diagram on page 56) and its output goes to the ratio detector for FM detection.

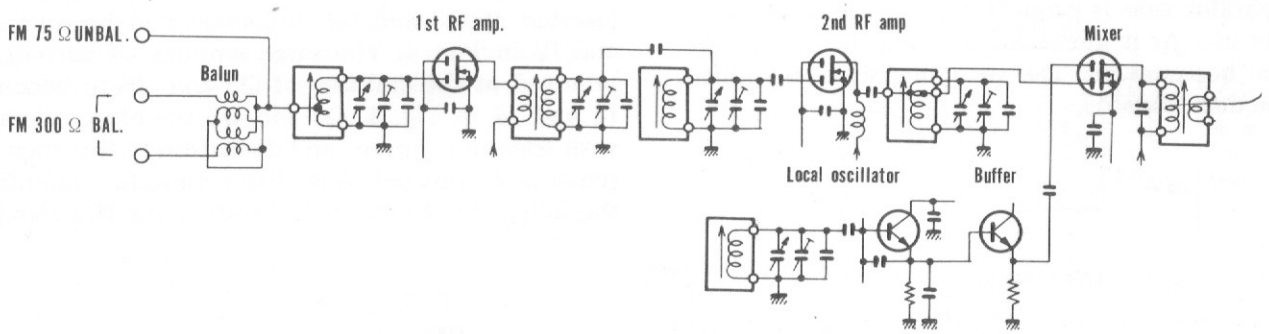

Fig. 1. Circuitry of FM front end

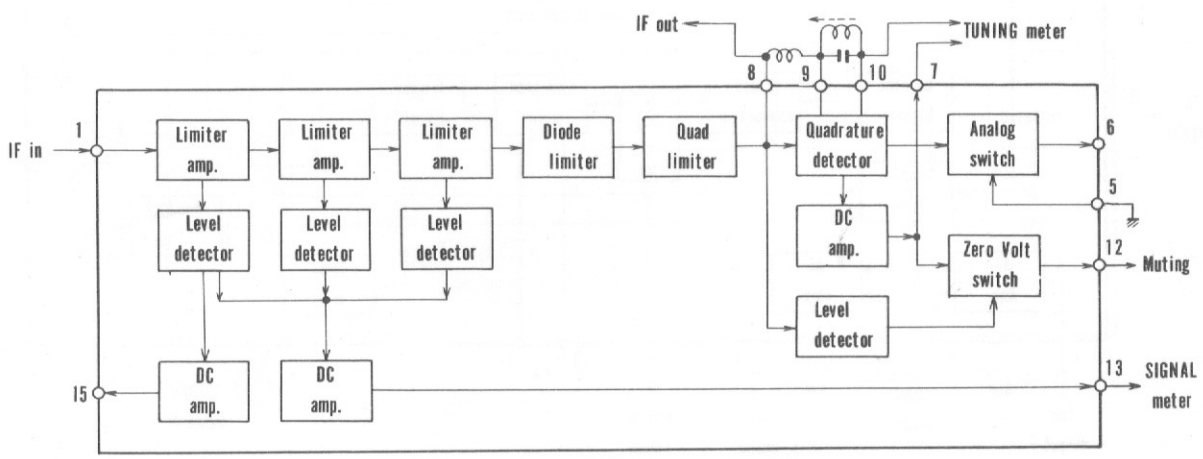

Fig. 2. Block diagram for HA1137

MODEL SX-1250 COMES IN THREE VERSIONS DISTINGUISHED AS FOLLOWS:

Type	Voltage	Remarks
KCU	120V only	CSA (Canada) and UL (U.S.A) approved with de-emphasis selector switch (25μs/75μs)
HG	220V and 240V (Switchable)	SEMKO (Sweden), NEMKO (Norway), DEMKO (Denmark) and EI (Finland) approved
S	110V, 120V, 220V and 240V (Switchable)	General export model with de-emphasis selector switch (25μs/50μs/75μs)

When repairing S or HG type, please see the manual on page 101.

CONTENTS

1. SPECIFICATIONS 4
2. FRONT PANEL FACILITIES 6
3. CONNECTION DIAGRAM 9
4. CIRCUIT DESCRIPTIONS
   - 4.1 Tuner Section 11
   - 4.2 Audio Section 14
   - 4.3 Protection Circuit 17
   - 4.4 Power Supply Circuit 18
5. LEVEL DIAGRAM 19
6. BLOCK DIAGRAM 20
7. DISASSEMBLY 22
8. PARTS LOCATION
   - 8.1 Front Panel View 25
   - 8.2 Rear Panel View 27
   - 8.3 Top View 29
   - 8.4 Bottom View 31
   - 8.5 Front View 33
9. ADJUSTMENTS
   - 9.1 AM Tuner 35
   - 9.2 FM Tuner 36
   - 9.3 Power Amplifier 38
   - 9.4 Stabilizer 38
10. DIAL CORD STRINGING 39
11. EXPLODED VIEWS 40
12. SCHEMATIC DIAGRAMS, P.C. BOARD PATTERNS AND PARTS LISTS
    - 12.1 Miscellaneous-parts 51

12.2 Schematic Diagram 53
12.3 Internal Circuitry of Integrated Circuits 55
12.4 The Circuit of FM Front End (AWB-023) 56
12.5 Tuner Assembly (AWE-068) 57
12.6 De-emphasis Switch Assembly (AWX-099) 63
12.7 Equalizer Amplifier Assembly (AWF-021) 64
12.8 Function Switch Assembly (AWS-094) 68
12.9 Flat Amplifier Assembly (AWG-042) 70
12.10 5P Connector Assembly (AWX-062) 75
12.11 Control Amplifier Assembly (AWG-041) 76
12.12 Filter Amplifier Assembly (AWM-089) 80
12.13 Microphone Jack Assembly (AWX-097) 83
12.14 Power Amplifier Assembly (AWH-048) 84
12.15 Speakers Switch Assembly (AWS-095) 88
12.16 Protection Circuit Assembly (AWM-091) 90
12.17 Stabilizer Assembly (AWR-106) 93
12.18 Power Supply Assembly (AWR-107) 96

13. PACKING 98

14. PARTS LIST OF EXPLODED VIEWS 99

15. SUPPLEMENTS FOR SX-1250/HG AND SX-1250/S

15.1 Contrast of Miscellaneous-parts 101
15.2 Schematic Diagram for SX-1250/S 103
15.3 Schematic Diagram for SX-1250/HG 105
15.4 De-emphasis Switch Assembly (AWX-101, for S type) 107
15.5 Speakers Switch Assembly (AWS-098, for HG type) 108
15.6 Power Supply Assembly (AWR-108, for HG type) 110

1. SPECIFICATIONS

Semiconductors

FETs 5
ICs 6
Transistors 82
Diodes 60

Power Amplifier Section

Continuous Power Output from 20 Hertz to 20,000 Hertz (Both channels driven). . 160 watts per channel (8 ohms)
200 watts per channel (4 ohms)

Total Harmonic Distortion (20 Hertz to 20,000 Hertz, from AUX)
Continuous Rated Power Output. . . No more than 0.1%
80 watts per channel power output, 8 ohms . . . . . No more than 0.05%
1 watt per channel power output, 8 ohms . . . . . No more than 0.07%

Intermodulation Distortion (50 Hertz : 7,000 Hertz = 4 : 1, from AUX)
Continuous Rated Power Output. . . No more than 0.1%
80 watts per channel power output, 8 ohms . . . . . No more than 0.05%
1 watt per channel power output, 8 ohms . . . . . No more than 0.07%

Frequency Response . . . . . 5Hz to 100,000Hz $^{+0}_{-1}$dB
Input Sensitivity/Impedance
POWER AMP IN . . . . . 1 V/50k ohms
Output
Speaker . . . . . A, B, C, A+B, B+C, A+C
Headphone . . . . . Low Impedance
Damping Factor
(20Hz to 20,000Hz, 8 ohms) 30
Hum and Noise (IHF, short-circuited, A Network) . . 100dB

Preamplifier Section

Input Sensitivity/Impedance
PHONO 1 . . . . . 2.5mV/50k ohms
PHONO 2 . . . . . 2.5mV/50k ohms
MIC . . . . . 6.5mV/50k ohms
AUX . . . . . 150mV/50k ohms
TAPE PLAY 1 . . . . . 150mV/50k ohms
TAPE PLAY 2 . . . . . 150mV/50k ohms
TAPE PLAY 2 (DIN connector) . . . . 150mV/50k ohms
PHONO Overload Level (T.H.D. 0.1%)
PHONO 1 . . . . . 500mV (1kHz)
PHONO 2 . . . . . 500mV (1kHz)
Output Level/Impedance
TAPE REC 1 . . . . . 150mV
TAPE REC 2 . . . . . 150mV
TAPE REC 2 (DIN connector) . . . . 30mV/80k ohms
PRE OUT . . . . . 1V/1k ohms
Total Harmonic Distortion
(20Hz ot 20,000Hz, 1V output) . . No more than 0.02%
Frequency Response
PHONO (RIAA equalization). .30Hz to 15,000Hz ±0.2dB
AUX, TAPE PLAY . . . . . 10Hz to 50,000Hz $^{+0}_{-1}$dB
Tone Control
BASS . . . . . MAIN ±10dB (100Hz)
SUB ± 5dB (50Hz)
TREBLE . . . . . MAIN ±10dB (10kHz)
SUB ± 5dB (20kHz)
Filter
LOW 30Hz (12dB/oct.)
HIGH 8kHz (12dB/oct.)
Loudness Contour (Volume control set at −40dB position) . . . . +6dB (100Hz), +3dB (10kHz)
Hum and Noise (IHF, short-circuited, A Network, rated power)
PHONO 75dB
AUX, TAPE PLAY 90dB
Muting . . . . . −20dB

FM Section

Usable Sensitivity . . . MONO . . . 8.7dBf (3.0μV/300Ω)
STEREO . . 14.5dBf (5.8μV/300Ω)
Usable Sensitivity (IHF '58) 1.5μV
50dB Quieting Sensitivity . . . .
MONO . . . 11.5dBf (4.1μV/300Ω)
STEREO . . 36.0dBf (69μV/300Ω)
Signal-to-Noise Ratio at 65dBf . . MONO 80dB
STEREO 74dB
Distortion at 65dBf 100Hz . . . . . MONO 0.1%
STEREO 0.25%
1kHz . . . . . MONO 0.1%
STEREO 0.2%
6kHz . . . . . MONO 0.3%
STEREO 0.3%
Frequency Response . . . . . 30Hz to 15,000Hz $^{+0.3}_{-1.0}$dB
Capture Ratio 1.0dB
Alternate Channel Selectivity 83dB
Spurious Response Ratio 110dB
Image Response Ratio 110dB
IF Response Ratio 120dB
AM Suppression Ratio 60dB
Muting Threshold 13dBf (4.9μV/300Ω)
Stereo Separation . . 50dB (1kHz), 35dB (30Hz ~ 15kHz)
Subcarrier Product Ratio 74dB
SCA Rejection Ratio 74dB
Antenna Input . . . . . 300 ohms balanced
75 ohms unbalanced

AM Section

Sensitivity (IHF, Ferrite antenna) 300μV/m
(IHF, Ext. antenna) 15μV
Selectivity 40dB
Signal-to-Noise Ratio 55dB
Image Response Ratio 65dB
IF Response Ratio 85dB
Antenna . . . . . Built-in Ferrite Loopstick Antenna

Miscellaneous

Power Requirements 120V 60Hz
Power Consumption . . . . . 650W (UL, CSA)
1200W (max.)
Dimensions . . . . . 556(W) x 186.5(H) x 464.5(D) mm
21-7/8(W) x 7-3/8(H) x 18-1/4(D) in
Weight Without Package . . . . . 29.2kg (64 lb 4 oz)
With Package . . . . . 33.2kg (73 lb 1 oz)

Furnished Parts

FM T-type Antenna 1
Operating Instructions 1
Hex. Wrench 1

NOTE:
Specifications and the design subject to possible modification without notice due to improvements.

HEX WRENCH

The accessory Hex. wrench is provided for removing the VOLUME and TUNING knobs, or for tightening its setscrew in the event it becomes loose.
If required, loosen the setscrew by inserting the wrench into the hole on the side of the knob and turning the wrench counterclockwise. Be particularly careful not to scratch the front panel when employing the wrench.

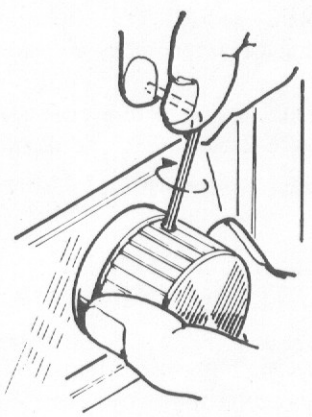

2. FRONT PANEL FACILITIES

FUNCTION SELECTOR BUTTONS

To select the program source, push each button as follows:

NOTE:
Only one FUNCTION button should be depressed at a time.

AM . . . . . For AM broadcast reception.

PHONO 1 . . . . . To operate a turntable connected to the PHONO 1 input jacks.

AUX . . . . . For listening to audio component (cartridge tape player, TV sound tuner, etc.) connected to the AUX input jacks.

FM . . . . . For FM stereo reception. Automatically receives monophonically during FM monophonic broadcasts. The STEREO indicator lights up when the broadcast is in stereo.

PHONO 2/MIC. As above for PHONO 2 jacks, or for reproduction through microphones connected to the MIC jack is on the front panel. Note, when the microphone is connected to the jack the turntable connected to the PHONO 2 jacks cannot be used.

TAPE DUPLICATE SWITCH

Set this switch in the ON (down) position to duplicate or edit a recorded tape using two tape decks.

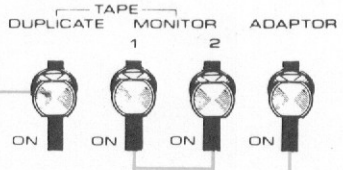

TAPE MONITOR (1, 2) SWITCHES

Set these switch in the ON (down) position as follow:

1 . . . . With a tape deck connected to the TAPE 1 jacks (REC and PLAY), either playback or monitoring of a recording in progress are possible.

2 . . . . Same as in 1 above, with a tape deck connected to the TAPE 2 jacks (REC and PLAY).

For normal use, leave in the OFF (up) positions.

ADAPTOR SWITCH

When employing adaptor components, such as a graphic equalizer adaptor, RG processor, or Dolby NR adaptor, depress this ADAPTOR switch to ON.

VOLUME CONTROL AND AUDIO MUTING SWITCH

The extremely high power output of the SX-1250 can be finely controlled by combining the calibrated VOLUME control and the AUDIO MUTING switch.

The AUDIO MUTING switch can also be used to briefly lower the volume when changing records or tapes.

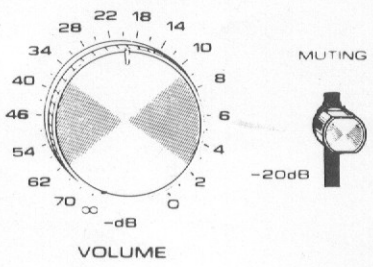

SPEAKER BUTTONS

Three sets of speaker terminals, A, B, and C, are provided on the rear panel, and the required speaker systems can be selected by depressing the SPEAKERS buttons as follows:

A ..... Speaker systems A operate
B ..... Speaker systems B operate
C ..... Speaker systems C operate

NOTES:

1. *When any two buttons (A+B, B+C, C+A) are depressed simultaneously, the corresponding pairs of speaker systems will come into operation. However, it is not possible to operate all three speaker systems at the same time, even though all the buttons are depressed.*
2. *For private listening through headphones, return all the SPEAKERS buttons to the OFF (undepressed) position.*

PHONES JACK

Accepts stereo headphones.

WARNING:
Do not plug a microphone into the PHONES jack as may damage the microphone.

POWER SWITCH

After turning this switch ON there is a delay of some 6 to 8 seconds, during which time the protection circuit operates to eliminate unpleasant noise.

TWIN BASS CONTROLS

Adjust low frequency tone.

100Hz: Adjusts frequency band below 400Hz. Control effectiveness at 100Hz is ±10dB.

50Hz: Provides additional control for the frequency band below 200Hz. Control effectiveness at 50Hz is ±5dB.

TONE SWITCH

In the OFF (up) position, this switch causes the amplifier section to operate with a flat frequency response regardless of the tone control setting.

FM TUNING METER

With the SIGNAL meter needle deflected to the right, make fine adjustment by centering the FM TUNING meter needle (indicating optimum reception).

SIGNAL METER

For AM and FM station tunings.

AM tuning: Tune for maximum deflection of the SIGNAL meter needle to the right.

FM tuning: Both the SIGNAL and FM TUNING meters work together. The optimum point of the SIGNAL meter needle is the same as in AM tuning. Then use the FM TUNING meters.

SPEAKER SYSTEM INDICATOR

FM STEREO INDICATOR

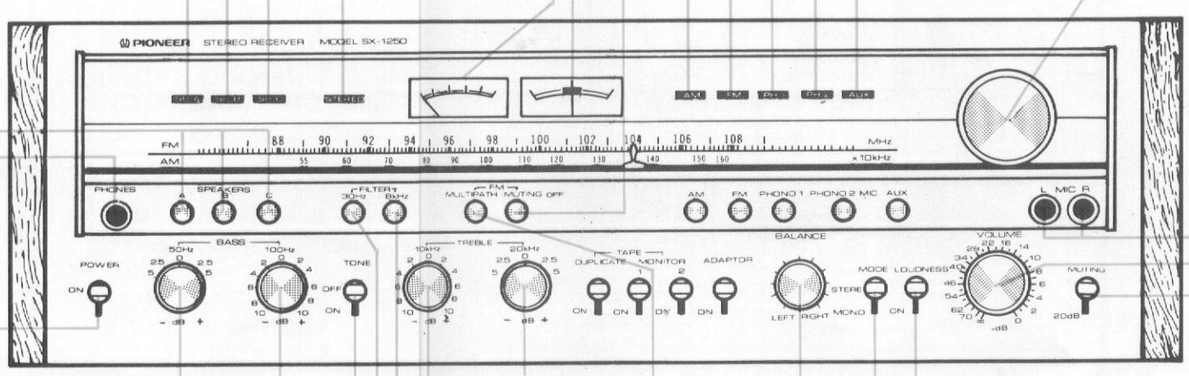
PIONEER STEREO RECEIVER MODEL SX-1250
STEREO
AM FM PHO 1 PHO 2 AUX
FM 88 90 92 94 96 98 100 102 104 106 108 MHz
AM 55 60 70 80 90 100 110 120 130 140 150 160 ×10kHz
PHONES
SPEAKERS A B C
FILTER 30Hz 8kHz
FM MULTIPATH MUTING OFF
AM FM PHONO 1 PHONO 2 MIC AUX
L MIC R
POWER ON
BASS 50Hz 100Hz
TONE OFF ON
TREBLE 10kHz 20kHz
TAPE DUPLICATE MONITOR 1 2
ADAPTOR
BALANCE LEFT RIGHT
MODE STEREO MONO
LOUDNESS ON
VOLUME
MUTING 20dB

TUNING KNOB

Select the station and tune for optimum reception by observing the SIGNAL meter for AM stations, and both SIGNAL and TUNING meters for FM stations.

FM MUTING BUTTON

Leave this button undepressed (in the ON position) to suppress unpleasant interstation noise while tuning between FM stations. Low-strength signals may also be suppressed by this function, so to pick up a weak station depress this button to the OFF position.

PROGRAM SOURCE INDICATOR

LOW CUT (30Hz) FILTER BUTTON

When low-pitched rumble (from turntable motor or other source) is obstrusive depress this button to provide 12dB/octave, attenuation at frequencies below 30Hz. If no interference is experienced, release this button.

HIGH CUT (8kHz) FILTER BUTTON

When high frequency scratch noise (from worn records or other source) is unpleasant, depress this button to provide 12dB/octave attenuation at frequencies above 8kHz. If there is no interference, release this button.

FM MULTIPATH BUTTON

When selecting the best position for the FM antenna, depress this button so that multipath noise is heard from the speaker systems. To listen to FM broadcasts, release this button.

TWIN TREBLE CONTROLS

Adjusts high frequency tone.

10kHz: Adjusts frequency band above 2.5kHz. Control effectiveness at 10kHz is ±10dB.

20kHz: Provides additional control for the frequency band above 5kHz. Control effectiveness at 20kHz is ±5dB.

MIC JACKS (L and R)

For connect each channel jacks the left and right channel microphones.

NOTE:
Use the high impedance (above 20kΩ) with 6mm diam. phone plugs.

VOLUME CONTROL

Adjusts output level to speakers and headphones.
Scale is graduated in dB, and when used in conjunction with the MUTING switch, finer and wider range attenuation can be performed. See additional description on page 6.

AUDIO MUTING SWITCH – 20dB

Depress this switch to attenuate the audio output by 20dB. This convenient feature saves having to disturb the VOLUME control, for example when answering the telephone.

LOUDNESS SWITCH

Depress this switch when listening at low volume. The frequency response of the human ear varies according to the listening volume, and the depressed position compensates for hearing response by emphasizing the bass and treble.

MODE SWITCH

For stereo playback, leave this switch undepressed (or depress to release, if already depressed). When depressed for MONO playback, left and right channel stereo signals will be mixed to produce monophonic sound from both speaker systems.

BALANCE CONTROL

Adjusts the balance between the sound volume from the left and right speaker systems or headphones.

3. CONNECTION DIAGRAM

TURNTABLE

TURNTABLE

CARTRIDGE
TAPE PLAYER

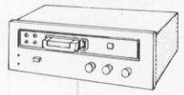

TAPE DECK
(open-reel, cassette)

LINE INPUT LINE OUTPUT

TAPE DECK
(Open-reel, cassette)

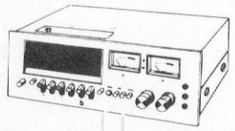

LINE INPUT LINE OUTPUT

DOLBY NR ADAPTOR

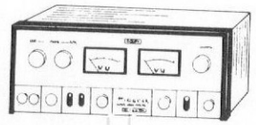

LINE INPUT LINE OUTPUT

4 CHANNEL DISCRETE
FM ADAPTOR

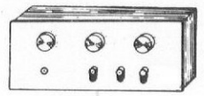

OUTDOOR
FM ANTENNA

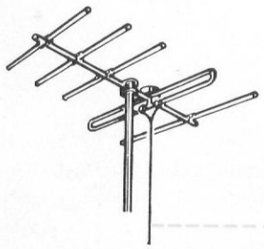

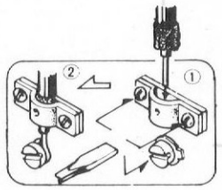

75Ω
coaxial
cable

T-TYPE
FM ANTENNA

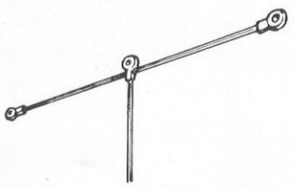

300Ω feeder

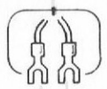

AM ANTENNA
(Indoor or Outdoor)

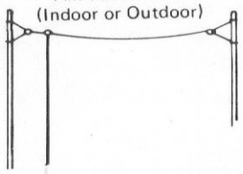

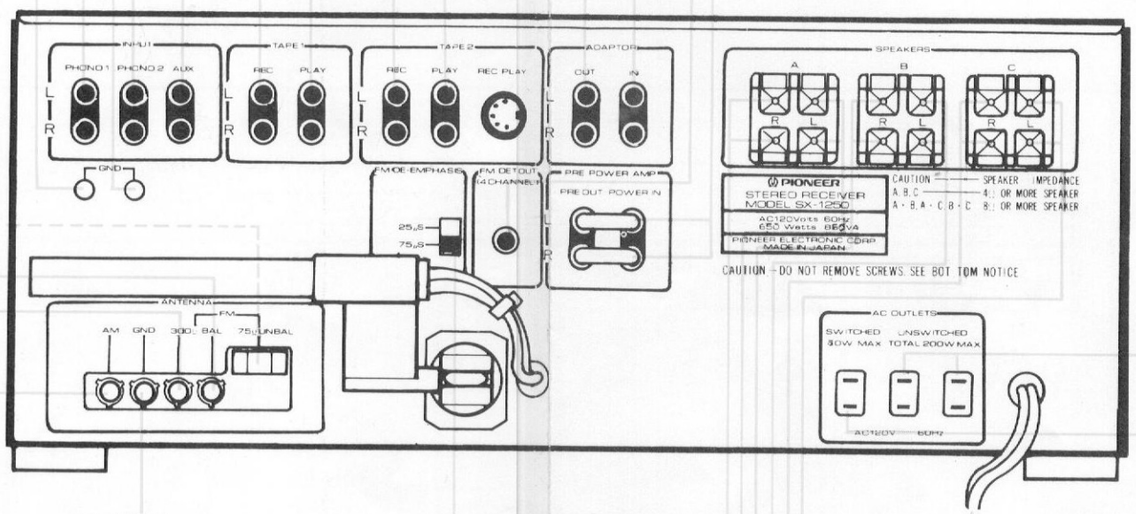

GND

PRE/POWER AMP

The bridge connecting plugs between PRE OUT and POWER IN jacks should always be left in position in normal use. If they are disconnected or removed, no sound will come from the speakers. Always be sure to switch off the power supply before attempting to remove them.

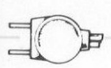

CONVENIENCE OUTLETS

Unswitched: (200W max.) Less frequently used components, which do not require coupled power, can be plugged into either of these outlets.

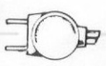

Switched: (50W max.) A frequently used component (turntable, tape deck, etc.) can be plugged into this outlet. By leaving the power switch of that component in the ON position, power supply to the component will be coupled with the SX-1250 switch operation.

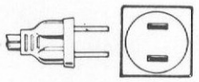

FM DE-EMPHASIS SWITCH

Normally, set this switch to "75μs". Be sure to set it to "25μs" only when listening to an FM broadcast (pre-emphasis; 25μsec.) with a Dolby* system NR adaptor connected between the ADAPTOR OUT and ADAPTOR IN terminals.

* The word "Dolby" is a trademark of Dolby Laboratories Inc.

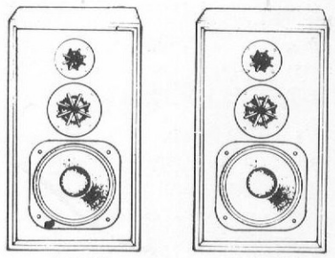

RIGHT LEFT

SPEAKER SYSTEMS A

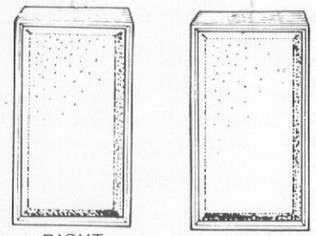

RIGHT LEFT

SPEAKER SYSTEMS B

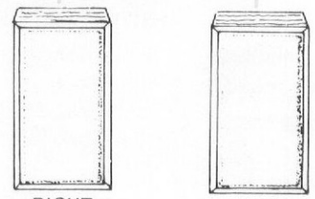

RIGHT LEFT

SPEAKER SYSTEMS C

4. CIRCUIT DESCRIPTIONS

4.1 TUNER SECTION

FM Front End

The FM front end is composed of a tuning circuit employing a 5-gang variable capacitor, a 2-stage RF amplifier and mixer employing dual gate MOS FETs, and a local oscillator with buffer. An equivalent of a cascode amplifier is produced by AC grounding gate-2 of the dual gate MOS FET, allowing stable RF amplification at high gain.

The output signal of the RF amplifier is applied to gate-1 of the mixer stage MOS FET, while the local oscillator output signal is applied to gate-2. This technique minimizes input power from the local oscillator, resulting in low mutual interference even if the received signal input level is high.

A variation of a Clapp circuit forms the local oscillator. Inclusion of a buffer amplifier between local oscillator and mixer reduces local oscillator load, eliminating distortion of the oscillation waveform. Drawing effect of the local oscillator is also eliminated.

FM IF Section

Four integrated circuits (ICs) and four dual element ceramic filters compose this section. HA1201 (diagram on page 56) is a differential amplifier with a constant current source and functions as a current-limiting limiter. HA1137 (diagram on page 55) contains IF limiter amplifier, quadrature detector, meter drive and muting circuits. The detector circuit contained within this IC is not used in the SX-1250 however, and instead the IF signal is taken from the stage prior to the detector and applied to TA7061AP. This latter IC is a 3-stage differential amplifier (diagram on page 56) and its output goes to the ratio detector for FM detection.

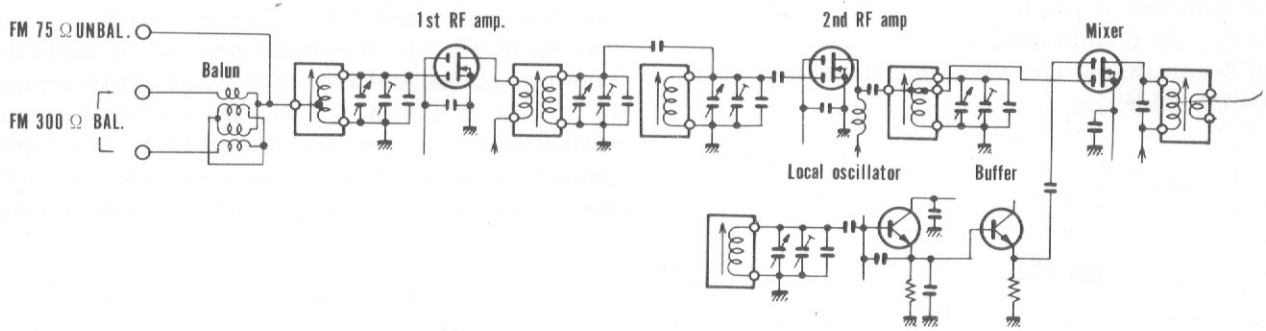

Fig. 1. Circuitry of FM front end

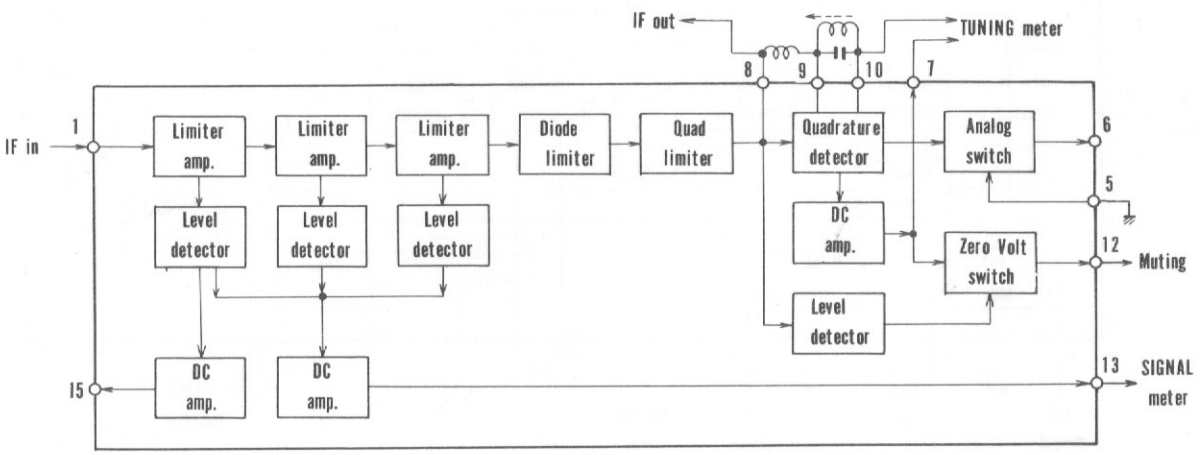

Fig. 2. Block diagram for HA1137

Multiplex Decoder

The multiplex decoder contains three sections and employs an IC (HA1196) with a block diagram as shown in Fig. 3 (see page 55 for circuit).

1. Switching Signal Generator

A PLL (phase locked loop) system is employed. 76kHz is generated by the VCO (voltage controlled oscillator: an oscillator in which frequency is controlled by a voltage) and converted into 38kHz by a frequency divider, then divided again to become 19kHz. This signal and the stereo pilot component (19kHz) of the detected signal are applied to a phase comparator where the difference between them is converted into a voltage. By feedback this voltage is applied to the VCO. And the oscillator signal is locked to the pilot signal. This loop is termed PLL and a 38kHz switching signal synchronized to the pilot signal is obtained and employed as a switching signal.

2. Automatic stereo detector

With the PLL locked to the pilot signal, the pilot signal and a 19kHz signal of the same phase are produced. A voltage is then obtained at the phase comparator that is proportional to the pilot signal amplitude. As it increases, the lamp lights and the switch becomes on. The switching signal is applied to the demodulator.

However, if the FM muting signal is also applied to pin 12, the detector circuit becomes disabled (grounded). Therefore a switching signal to the demodulator is not supplied and mono reproduction is obtained.

3. Demodulator

Two differential amplifiers are employed in a switching circuit (Fig. 4). The composite signal is applied to the base of Q3. Q1 and Q2 are alternately switched ON and OFF by the switching signal. The composite signal amplified at Q3 is demodulated by the switching of Q1 and Q2. Q6 and Q3 are loosely coupled at their emitters by R1, R2 and R3. Q6 is driven in opposite phase to Q3 and its low level composite signal output is demodulated by switching of Q4 and Q5. The demodulated signals in opposite phase are combined at the collectors of Q1 and Q2, cancelling crosstalk. Adequate current flow is required in Q3 and Q6 for low distortion. However, if the base bias voltage is raised, the voltage range available at the collector is reduced and clipping occurs (power supply voltage is limited by IC voltage requirement). For this reason, current from an external source is inserted at Q3 and Q6 collectors and become I1 and I2 in Fig. 4. The same amount of current is removed at the emitters of Q3 and Q6 to become I3 and I4 in Fig. 4. Q3 and Q6 therefore operate with adequate current and distortion in this stage is remarkably reduced. A feedback amplifier amplifies the demodulated signal to produce the IC outputs.

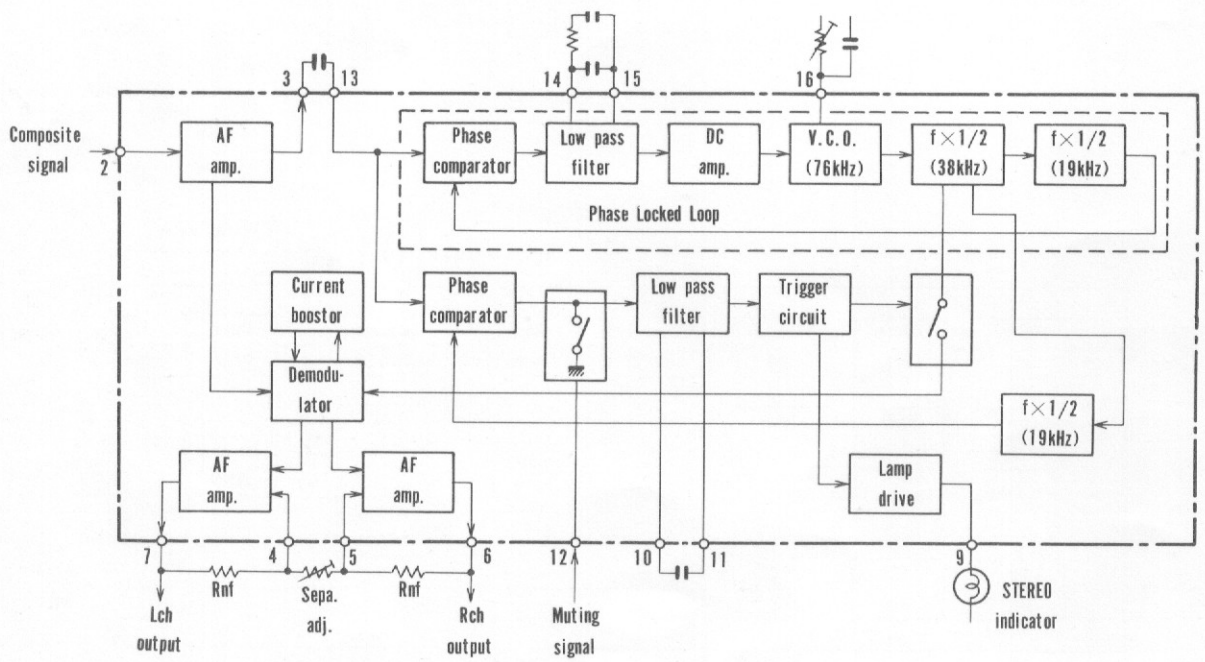

Fig. 3. Block diagram for HA1196

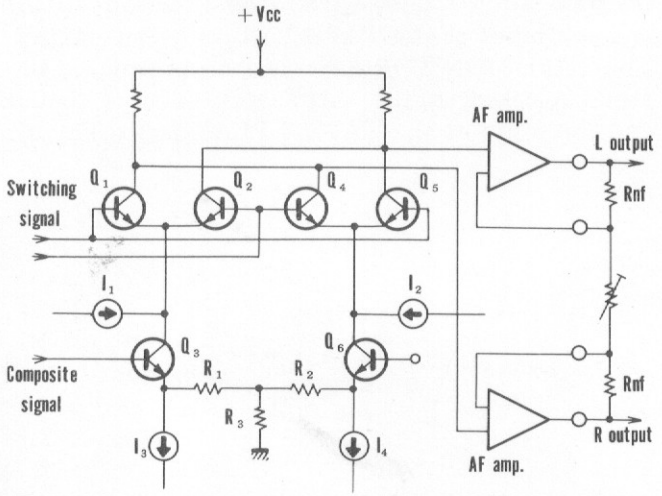

Fig. 4. Basic circuitry of demodulator

FM Muting Circuit (Fig. 5)

DC voltage emerges from pin 12 of IC (HA1137) in the event of more than ±70kHz detuning or low input level (less than 4.9μV antenna input conversion). This is employed for shorting the AF output circuit to perform muting by the reed relay.

Multipath Monitor Circuit

When multipath reflections exist in the received signal, the signal is converted into AM and PM (amplitude modulation and phase modulation) forms. Since the amplitude of the actual FM signal is fixed, by converting this AM component into a sound and listening to it, the existence (and amount) of multipath reflection can be determined. Short term level variations (audio frequency) are taken as a signal from HA1137 SIGNAL meter drive terminal (pin 13). By setting the FM MULTIPATH switch to ON during FM reception, this signal becomes connected to the audio amplifier and can be heard as a sound which indicates conditions of multipath reflection.

AM Tuner

The AM tuner employs a 3-gang variable capacitor and an IC (HA1138) with 1-stage of RF and 2-stage of IF amplification. Fig. 6 shows the HA1138 block diagram (see page 55 for circuit).

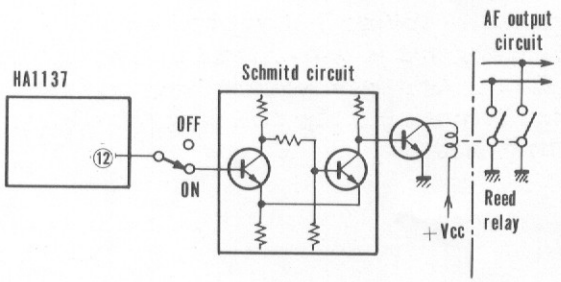

Fig. 5. Circuitry of FM muting

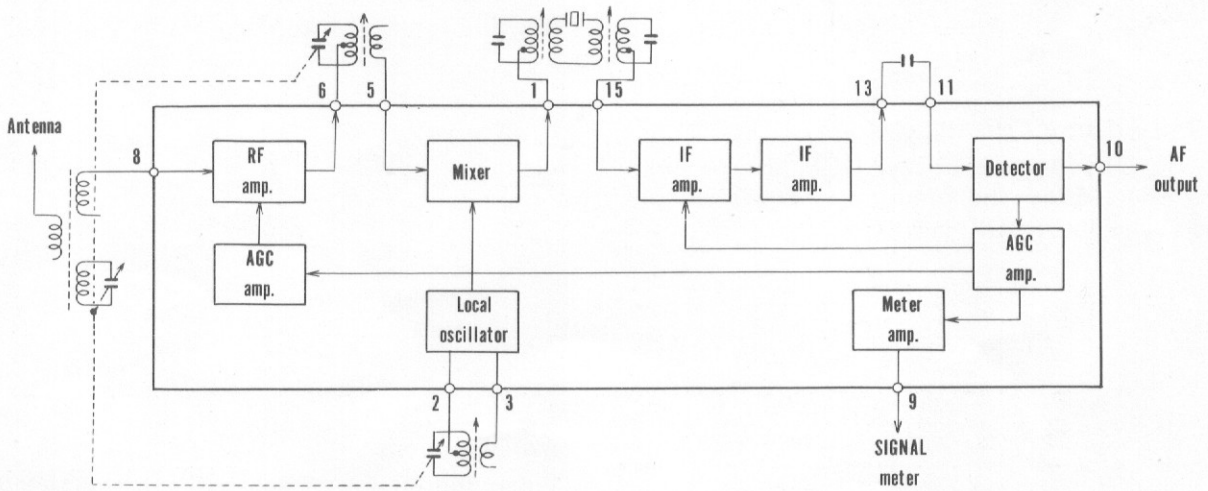

Fig. 6. Block diagram for HA1138

4.2 AUDIO SECTION

Equalizer Amplifier

The equalizer amplifier is shown in Fig. 7. The first stage (Q1 & Q2) is a PNP transistor unbalanced differential amplifier. High voltage gain is provided in the following stage (Q3) by a bootstrap circuit (C1 & R1). The output stage (Q4 & Q5) is a complementary symmetrical SEPP circuit. The high voltage utility factor of the SEPP circuit provides a high maximum output voltage. Dynamic range of the equalizer amplifier is therefore wide and overload input level at 0.1% distortion is 500mV (rms at 1kHz).

Equalizer elements (C2, C3, R2, R3) are polystyrene film capacitors with tolerances within ±1% and metal film resistors with tolerances better than ±1%. These lead to a deviation with respect to the RIAA playback standard within ±0.2dB. Due to the balanced plus and minus power supply, the input and the output points become essentially 0V, reducing click noise during FUNCTION switch operation.

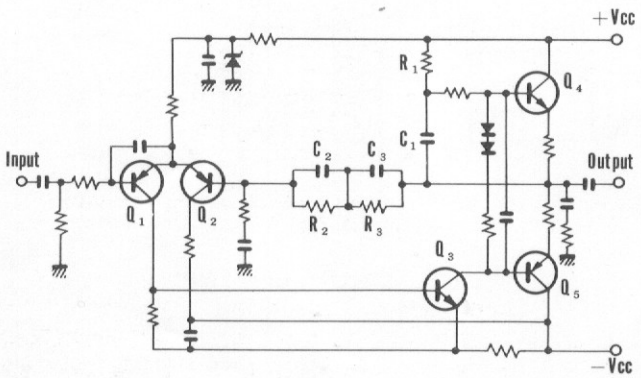

Fig. 7. Schematic diagram for Equalizer amplifier

Tape and Adaptor Circuits

With the DUPLICATE switch OFF, the program source selected by the function switches are obtained at the TAPE REC jacks (Fig. 8).

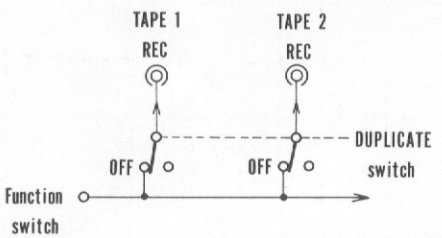

Fig. 8. TAPE REC jacks

The TAPE MONITOR 1 switch selects between the program source selected by the function switch and the input at the TAPE 1 PLAY jacks (Fig. 9). The TAPE MONITOR 2 switch selects between the signal selected by the TAPE MONITOR 1 switch and the input at the TAPE 2 PLAY jacks (Fig. 9).

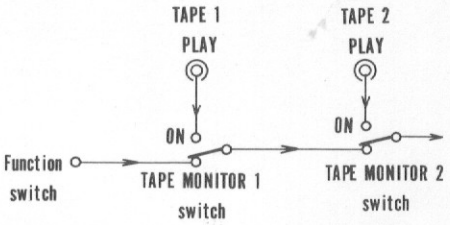

Fig. 9. Tape monitor circuit

When the DUPLICATE switch is set to ON, the TAPE 1 REC jacks are connected to the TAPE 2 PLAY jacks, and the TAPE 2 REC jacks to the TAPE 1 PLAY jacks (Fig. 10).

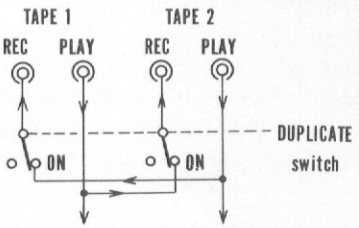

Fig. 10. Tape duplicate circuit

The signal selected by the TAPE MONITOR 2 switch appears at the ADAPTOR OUT jacks (Fig. 11). The ADAPTOR switch selects between the signal selected by the TAPE MONITOR 2 switch and the input at the ADAPTOR IN jacks (Fig. 11).

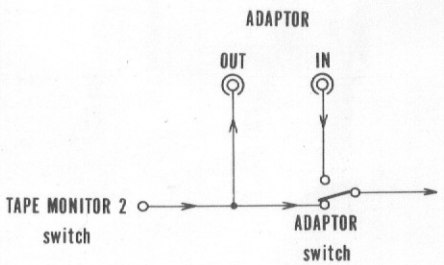

Fig. 11. ADAPTOR jacks

MODE Switch

When the MODE switch is set to the MONO position, the left and right channels are shorted in the stage following the tape and adaptor circuits.

BALANCE Control

A no-loss HB type variable resistor at center position is employed. An SEPP circuit is inserted as a buffer in the following stage.

Muting Circuit

When the MUTING switch is set to the −20dB position, the signal is attenuated by 20dB.

Loudness Circuit

This circuit is operated ON or OFF by the LOUDNESS switch and is intended to compensate for audibility characteristics of the human ear at low volumes. The VOLUME control variable resistor is tapped. Connecting a CR network at this point enhances low and high frequencies at low volumes.

Tone Controls

Twin tone controls are employed with the SX-1250. These consist of ultra-low and ultra-high (sub) controls in addition to the conventional BASS and TREBLE (main) controls.

The signal is amplified to required level by a 2-stage FET and transistor direct coupled amplifier, after which a 2-stage NFB type tone control circuit is provided. The sub controls form the first stage and the main controls form the second stage of this circuit. With NFB type tone controls, C-B feedback is applied to a single transistor amplifier. Frequency response becomes variable by providing selectivity in the feedback circuit. The basic circuit of this stage is shown in Fig. 12.

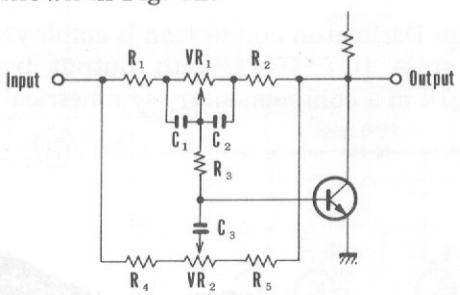

Fig. 12. Basic circuitry of NFB type tone control circuit

Midrange Operation

The C1 and C2 reactances are considerably smaller than VR1 at frequencies above midrange, effectively shorting VR1. At frequencies below midrange, C3 reactance becomes large and in effect, opens the circuit. Consequently, the circuit becomes equivalent to that shown in Fig. 13 with respect to the midrange. In this figure, the circuits parameters are not changed by any change in position of the VR1 and VR2 sliders. The NFB amount is therefore fixed and the circuit gain is also fixed without regard to VR1 and VR2 slider positions.

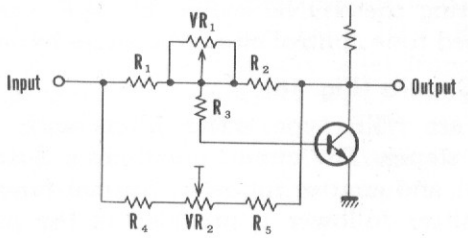

Fig. 13. Midrange operation of NFB type tone control circuit

Low Frequency Operation

The reactance of C1 and C2 increases at low frequency to form a circuit as shown in Fig. 14. This reactance increases in proportion to the frequency declines. Also, the NFB amount varies greatly according to VR1 slider position. The circuit gain at low frequencies can therefore be varied by VR1.

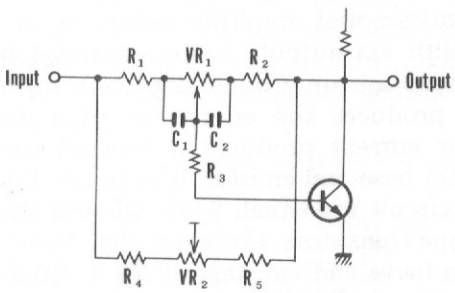

Fig. 14. Low frequency operation of NFB type tone control circuit

High Frequency Operation

The considerably smaller reactance of C1 and C2 at high frequency in comparison with VR1 effectively shorts VR1 to from an equivalent circuit such as that shown in Fig. 15. C3 reactance decreases in the same degree that the frequency increases and the NFB amount is now mainly controlled by the VR2 slider position. Consequently, the gain at high frequencies can be varied by VR2.

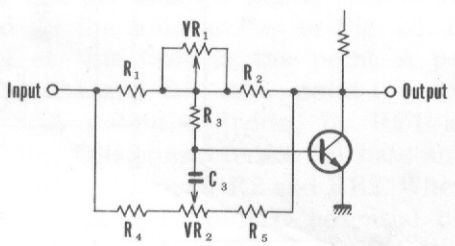

Fig. 15. High frequency operation of NFB type tone control circuit

Tone Defeat Circuit

By setting the TONE switch to OFF, the above described tone control circuit becomes bypassed.

Filter Circuits (Fig. 16)

These are NFB type active filters with −12dB/octave slopes. The circuit combines a 2-stage CR element and emitter follower. Normal function of the emitter follower is provided in the passband and by 100% NFB, gain becomes essentially "1". NFB is cancelled in the area of the cutoff frequency, composing a peak in the frequency response. This leads to improved and sharper CR filter response. In the actual circuit, CR elements for low and high filters both employ the same emitter follower and each can be selected ON-OFF.

Power Amplifier

Fig. 17 shows the power amplifier section. The input stage is composed of Q1 & Q2 differential amplifier, with the input signal applied to Q1. Q3 & Q4 differential amplifier comprise the second stage, with Q3 output composed at Q4 by Q5 & Q6 current mirror. Connecting collector and base of Q5 produces the equivalent of a diode. Q3 collector current produces a forward voltage between Q5 base and emitter, biasing Q6. R1 and R2 in this circuit are equal, while Q5 and Q6 are the same type transistors. Consequently, when voltages between bases and emitters of Q5 & Q6 are equal, current flows in these transistors also become equal. This results in equal current flows in Q3 and Q6. Mutually opposite phase signals drive Q3 and Q4, resulting in mutually opposite phase collector currents. Q4 and Q6 therefore operate as push-pull.

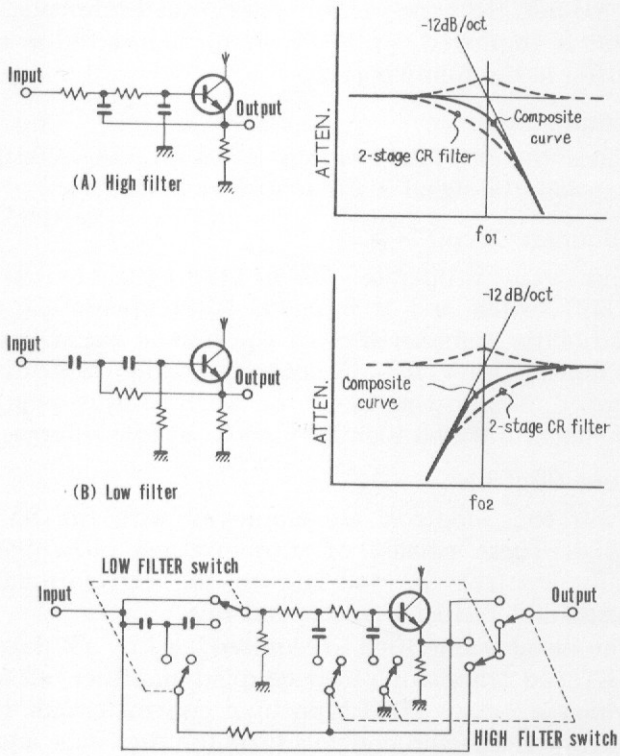

Fig. 16. Basic circuitry of filters

Power stage bias voltage is supplied by the voltage drop across D1, D2 and VR2. VR2 is a semi-fixed resistor for power stage bias adjustment, while D1 and D2 are Varistors for temperature compensation.

A 3-stage Darlington connection is employed in the power stage (Q7—Q14), with output transistors Q11—Q14 in a complementary symmetrical parallel

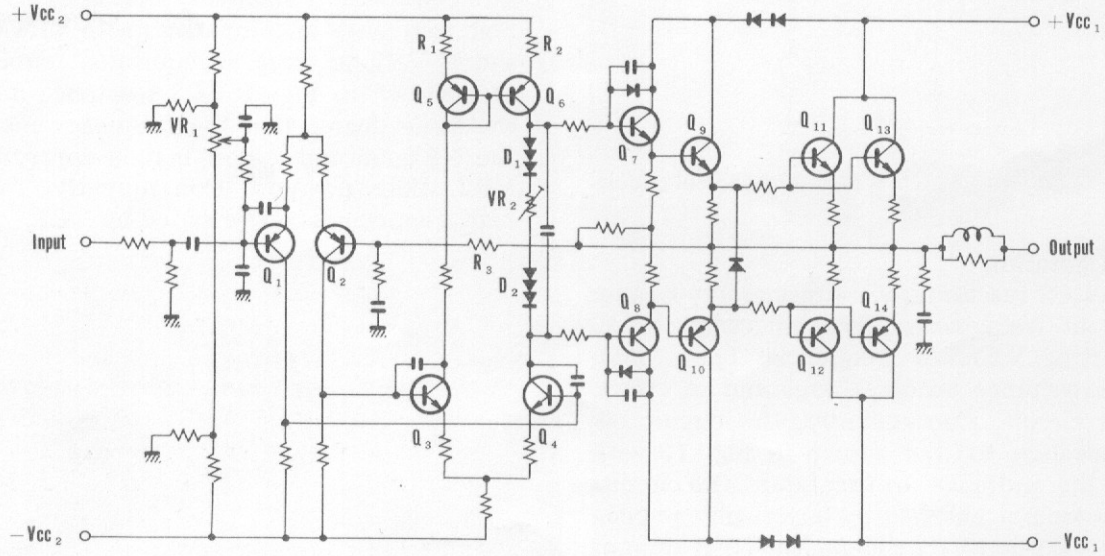

Fig. 17. Schematic diagram for power amplifier

connection. The output center point is at 0V from the balanced plus and minus power supply, while 100% DC NFB is applied to Q2 through R3. Because of this, circuit DC gain becomes 0dB and DC voltage of the output center point is determined by Q1 base voltage. VR1 is a semi-fixed resistor for fine adjustment of the center point voltage to compensate for irregularities in circuit elements.

SPEAKERS Switches

The SX-1250 is provided with 3 sets of speaker terminals (A, B, C). Since the power amplifier can become overloaded if all three sets are used simultaneously, when all 3 SPEAKERS switches are set to ON, the circuit functions as if all switches were OFF and the indicator lamps extinguish.

4.3 PROTECTION CIRCUIT

This circuit protects the power transistors in case of overload, the speakers in case of power amplifier malfunction, and also performs a muting function when the power supply is turned ON or OFF. The protection circuit is composed of three sections (Fig. 18).

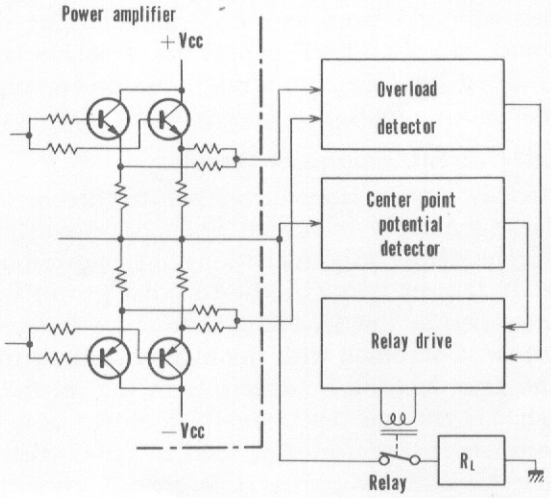

Fig. 18. Block diagram of protection circuit

1. Relay Driver Circuit (Fig. 19)

The relay which connects the output circuits is driven by this circuit. It also performs a muting function to prevent unpleasant noise during ON-OFF operation of the power supply as well as opening the output circuit on command from the detector circuits.

Muting Operation

When the power supply is turned ON, Q6 base is reverse biased through D6 and R19—R21, turning Q6 OFF. Q7 base potential rises as C4 charges through R22 & R23, and Q7 turns ON several seconds later. The collector current of Q7 then flows through the relay coil, operating the relay to turn on the power amplifier output circuit. The reverse bias of Q6 base from D6 & R19—R21 disappears when the power supply is set from ON to OFF. Q6 remains ON however, due to the residual power supply voltage. C4 very rapidly discharges, Q7 base potential drops and Q7 turns OFF. The relay releases and the power amplifier output circuit turns OFF.

Note:
Q5 is normally OFF due to base bias and does not participate in the muting operation.

Operation by Detector Circuit Command

Command from the detector circuits pass through one of D3, D4 or D5 and are applied in the form of a current flow. Q5 is normally reverse biased through R14, but when a large current flows through on of these diodes, Q5 base potential declines according to the voltage drop at R14. Q5 then becomes ON, Q6 base potential rises and Q6 becomes ON. C4 rapidly discharges and Q7 base potential drops, turning Q7 OFF. The relay releases and the power amplifier output circuit becomes cut off.

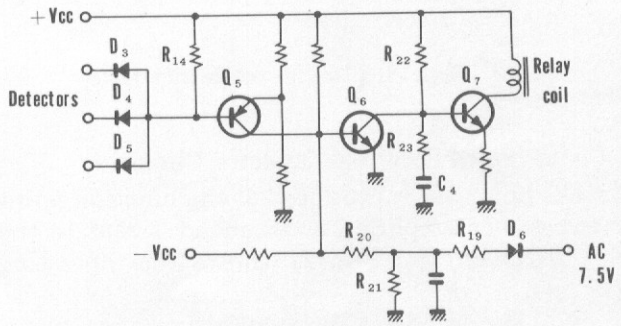

Fig. 19. Schematic diagram of relay driver circuit

2. Overload Detector Circuit

Shorting of the power amplifier load or a load impedance below the specified value causes a command to be sent to the relay drive circuit. This is illustrated in Fig. 20.

With the output stage in class B operation, when Qa is operating in the positive half cycle, Qb becomes cut off and the signal current flows as indicated by the solid arrows in Fig. 20. Point D potential at this time is the point A potential divided by R1 and R3. Also, point C potential is the point A potential divided by RE1 and RL (load). Point D is connected to Q1 base and point C to Q1 emitter through R2 and RE2. When RL is extremely small, the point C potential becomes considerably lower than point D. This potential difference forward biases Q1. Q1 turns ON and current flows in D3.

Qb operates in the negative half cycle and Qa becomes cut off. The signal flows is indicated by the broken line arrows in the center of Fig. 20. Q1 is biased by the potential difference between point C and point E. If RL is extremely small, the point C potential becomes considerably higher than that of point E. Q1 turns ON and current flows in D3.

If large current flows in Qa and Qb, Q1 becomes ON due to the RE1 and RE2 voltage drops, and current flows in D3. C1 prevents faulty operation due to external noise.

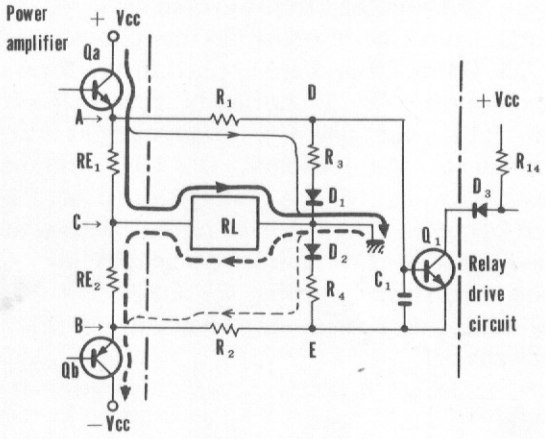

Fig. 20. Basic circuitry for overload detector

3. Center Point Potential Detector Circuit

If a DC potential is produced at the junction point of the power amplifier, a command is sent to the relay drive circuit. Fig. 21 shows this operating principle.

Q3 and Q4 compose a differential amplifier. When the same input is applied to both input terminals (Q3 and Q4 bases), no output is present. However, if there is a difference between the terminal inputs, the difference is amplified and becomes the output between the two collectors. During normal operation, an AC signal only is present at the junction point. As C2 reactance is sufficiently low, the same signal is applied to Q3 and Q4 bases, resulting in an absence of output at the collector sides.

When a DC potential is produced at the junction point, it becomes the input of Q3 only. If the voltage is negative, Q3 collector current declines And at Q4 the collector current increases and the potential drops, causing current to flow through D4.

If the DC voltage is positive, Q3 collector current increases and the potential drops, while at Q4 the collector current decreases and the potential rises. Current therefore flows through D5.

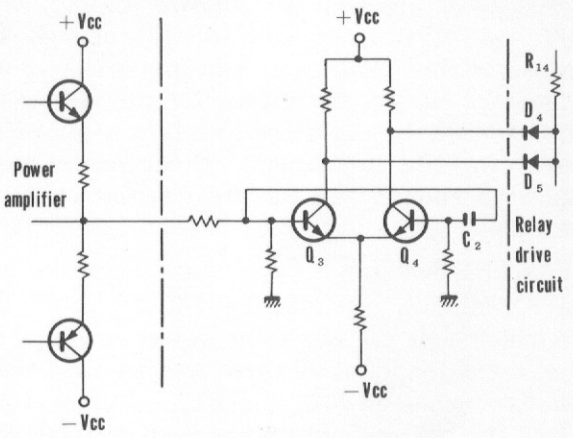

Fig. 21. Basic circuitry for center point potential detector

4.4 POWER SUPPLY CIRCUIT

All power supplied are regulated up to the power amplifier predriver stage. Independent power transformer secondary windings are employed for left and right channels in the power stage. Each channel is also supplied from an independent bridge rectifier and two 22,000μF capacitors. Position lamps are lighted by DC from a regulated power supply for stable illumination.

Inrush Current Suppressor Circuit

Ordinarily, power transformer inrush current when the power supply is turned on is opposed by DC resistance of the winding and instantaneous inductance of the air core. In the toroidal power transformer used in the SX-1250, both these factors are very low. Combined with the high charging current of the four 22,000μF capacitors in the secondary, inrush current can reach several hundred amperes. A resistors is therefore provided in series with the primary coil to suppress this inrush current to several tens of amperes. This resistor becomes shorted after power transformer excitation.

The inrush suppressor circuit is shown in Fig. 22. S1 is the POWER switch and S2 a relay contact. The Microtemp is a temperature responding fuse.

S2 is open before power is turned on, connecting the power transformer primary coil in series with R1 and the Microtemp. After power has been turned on, the relay operates when DC current is obtained from the rectifier, closing S2. If S2 fails to close, due to power supply or relay malfunction, R1 heating opens the Microtemp (109°C operating temperature), thus opening the primary circuit.

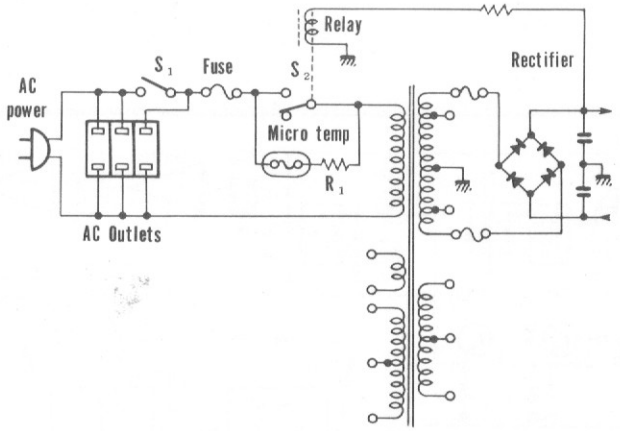

Fig. 22. Basic circuitry for inrush current suppressor

5. LEVEL DIAGRAM

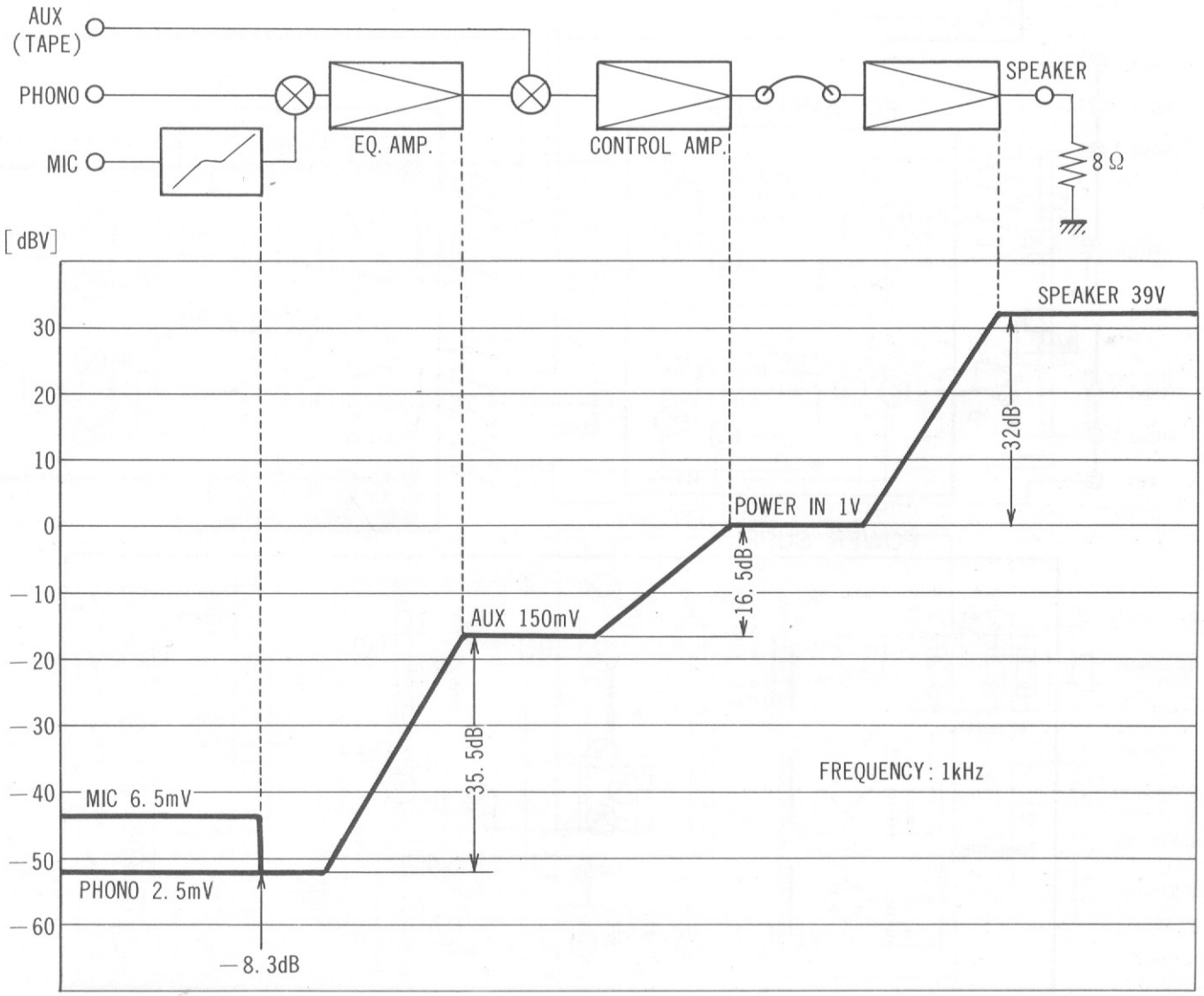

6. BLOCK DIAGRAM

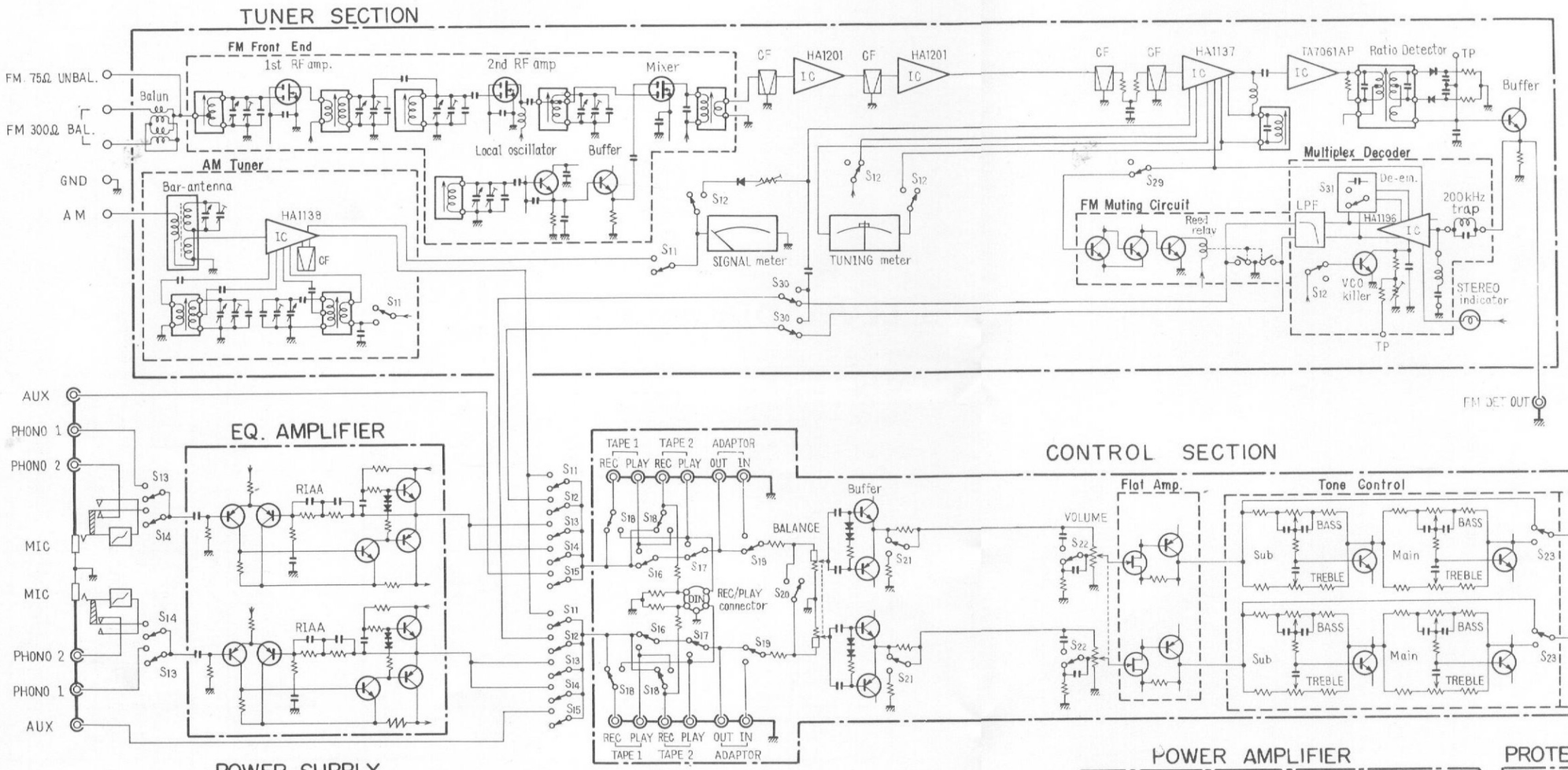

SWITCHES :

S1 : POWER

(FUNCTION)

S11 : AM
S12 : FM
S13 : PHONO 1
S14 : PHONO 2/MIC
S15 : AUX

S16 : TAPE MONITOR 1
S17 : TAPE MONITOR 2
S18 : TAPE DUPLICATE
S19 : ADAPTOR
S20 : MODE
S21 : MUTING
S22 : LOUDNESS
S23 : TONE
S24 : LOW FILTER
S25 : HIGH FILTER

(SPEAKERS)

S26 : SPEAKERS A
S27 : SPEAKERS B
S28 : SPEAKERS C

S29 : FM MUTING
S30 : FM MULTIPATH
S31 : FM DE-EMPHASIS

7. DISASSEMBLY

Top Plate

Remove the six screws (A) to detach the top plate.

Wooden Cover

Remove the two screws (B) on each side of the wooden cover.

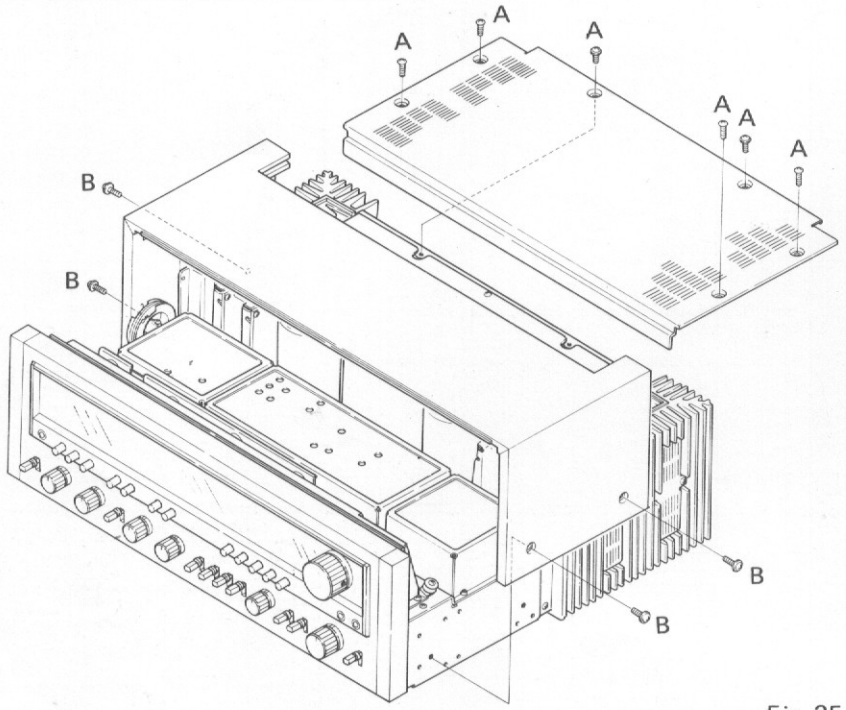

Fig. 25

Bottom Plate

Remove the fifteen screws to detach the bottom plate.

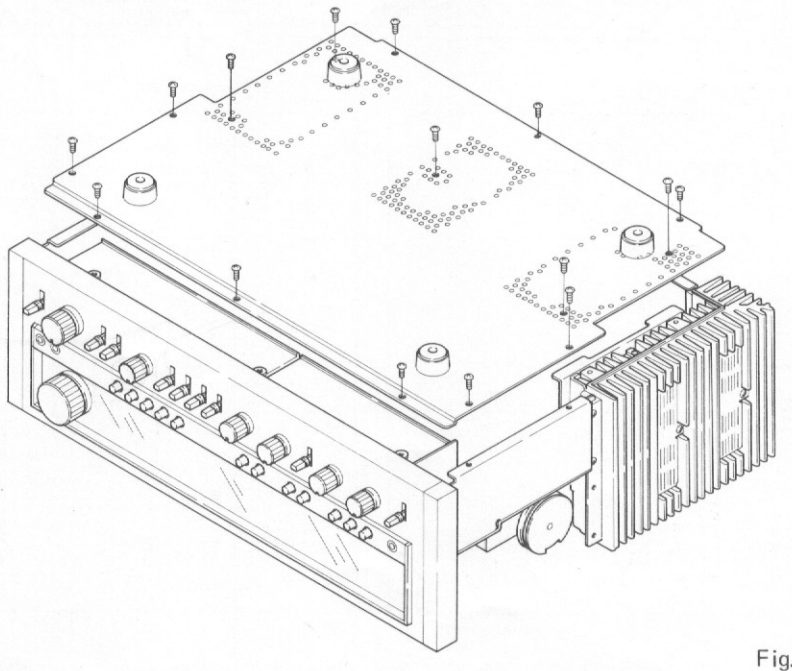

Fig. 26

Front Panel

Loosen the setscrews of TUNING and VOLUME knobs with a hexagonal wrench. Remove all the knobs by pulling. Remove the two screws from the top edge of the front panel. Remove the three nuts from the sub-tone and volume control shafts.

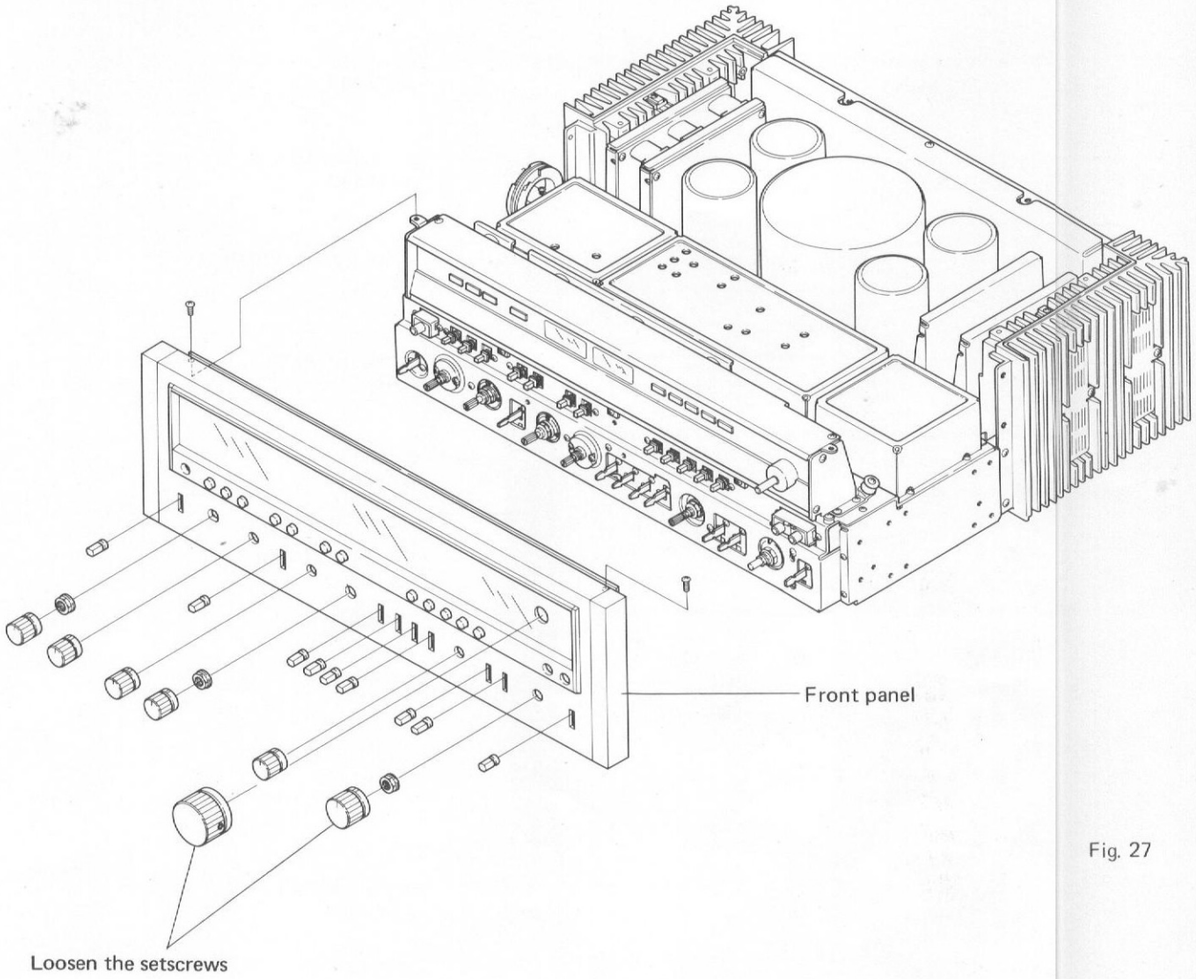

Fig. 27

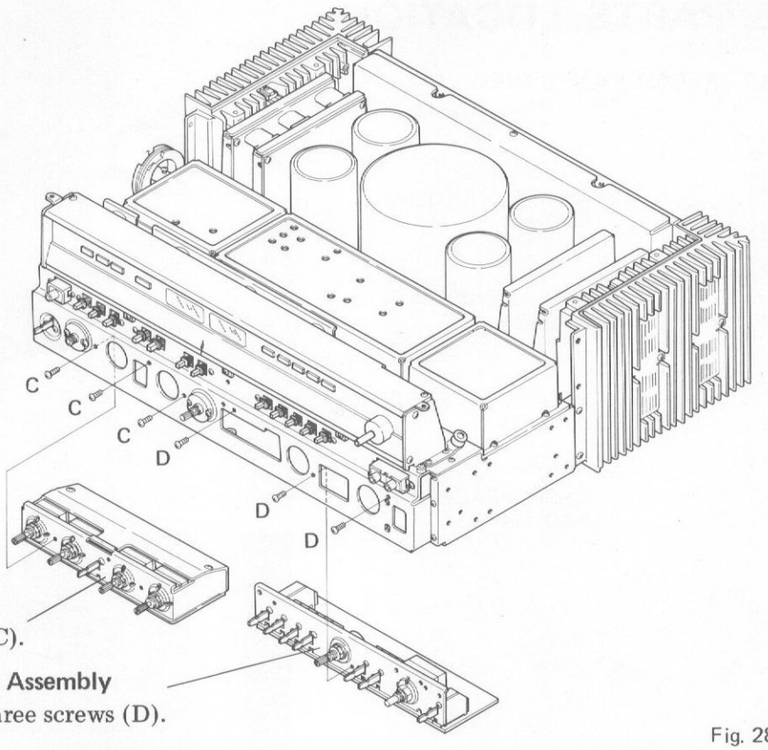

Tone Amplifier Assembly
Remove the three screws (C).

Flat Amplifier Assembly
Remove the three screws (D).

Fig. 28

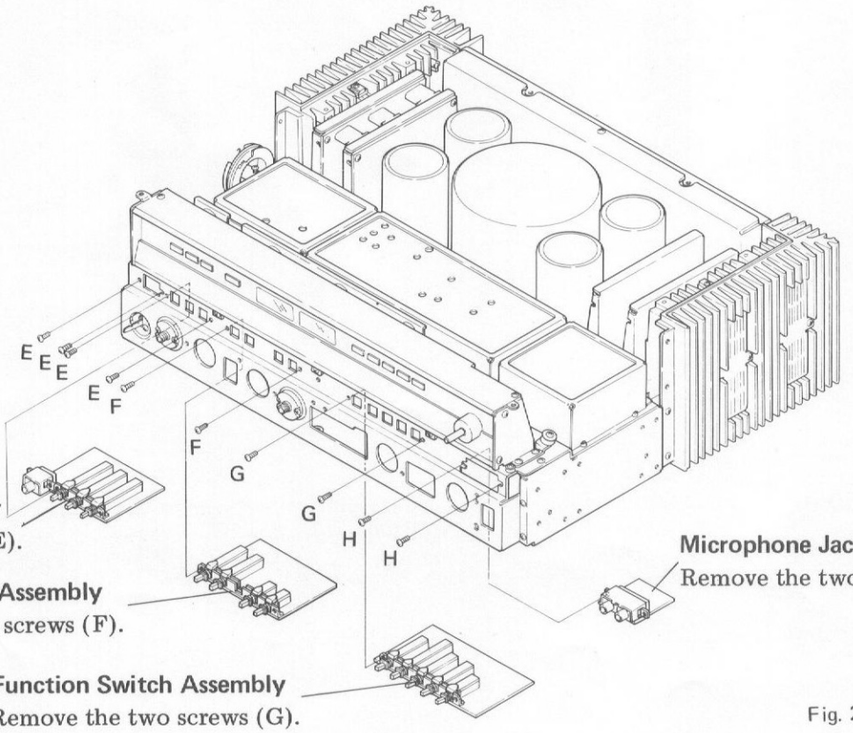

Speakers Switch Assembly
Remove the four screws (E).

Filter Amplifier Assembly
Remove the two screws (F).

Function Switch Assembly
Remove the two screws (G).

Microphone Jack Assembly
Remove the two screws (H).

Fig. 29

8. PARTS LOCATION

8.1 FRONT PANEL VIEW

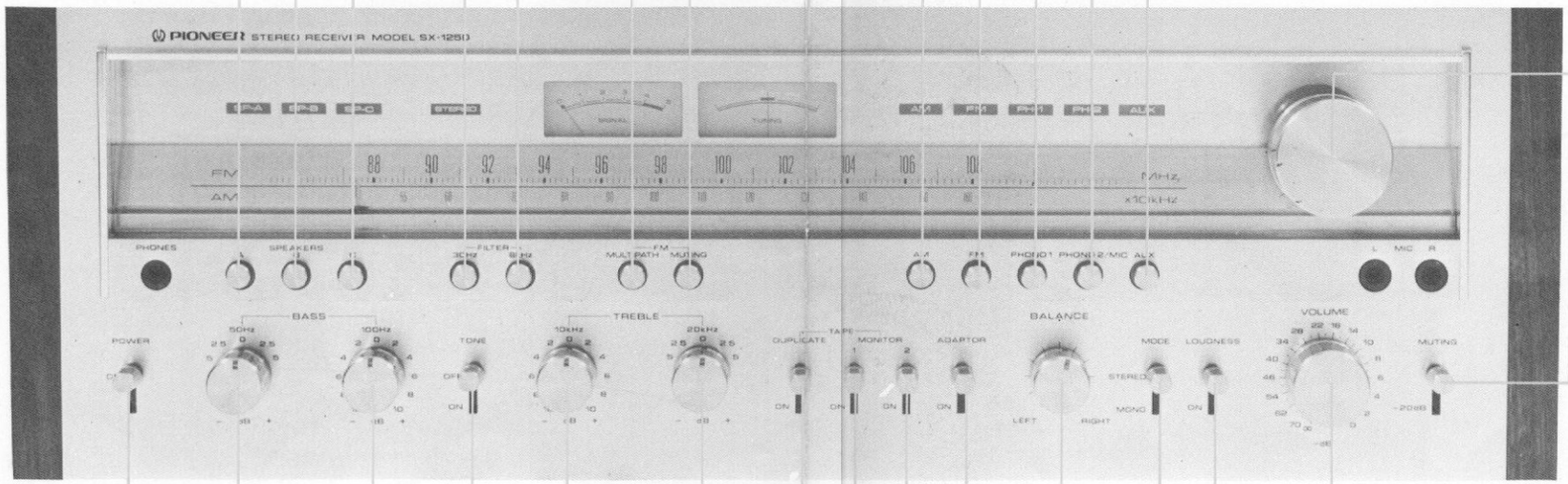

Knob (FILTER 8kHz)
AAD-114

Knob (FM MULTIPATH)
AAD-114

Knob (AM)
AAD-114

Knob (FILTER 30Hz)
AAD-114

Knob (FM MUTING)
AAD-114

Knob (FM)
AAD-114

Knob (SPEAKERS C)
AAD-114

Front panel assembly
ANB-386

Knob (PHONO 1)
AAD-114

Knob (SPEAKERS B)
AAD-114

Knob (PHONO 2/MIC)
AAD-114

Knob (SPEAKERS A)
AAD-114

Knob (AUX)
AAD-114

Knob (Tuning)
AAA-034

Knob (MUTING)
AAD-113

Knob (VOLUME)
AAB-104

Knob (LOUDNESS)
AAD-113

Knob (POWER)
AAD-113

Knob (MODE)
AAD-113

Knob (BASS 50Hz)
AAB-100

Knob (BALANCE)
AAB-100

Knob (BASS 100Hz)
AAB-100

Knob (TREBLE 10kHz)
AAB-100

Knob (TAPE MONITOR 1)
AAD-113

Knob (ADAPTOR)
AAD-113

Knob (TONE)
AAD-113

Knob (TREBLE 20kHz)
AAB-100

Knob (TAPE DUPLICATE)
AAD-113

Knob (TAPE MONITOR 2)
AAD-113

8.2 REAR PANEL VIEW

Terminal (TAPE 2)
AKB-030

Terminal (TAPE 1)
AKB-030

Terminal (INPUT)
AKB-033

Terminal (GND)
AKE-012

Bar-antenna holder
W72-092

Ferrite bar-antenna
ATB-051

Terminal (ANTENNA)
AKA-004

Slide switch (DE-EMPHASIS)
ASH-015

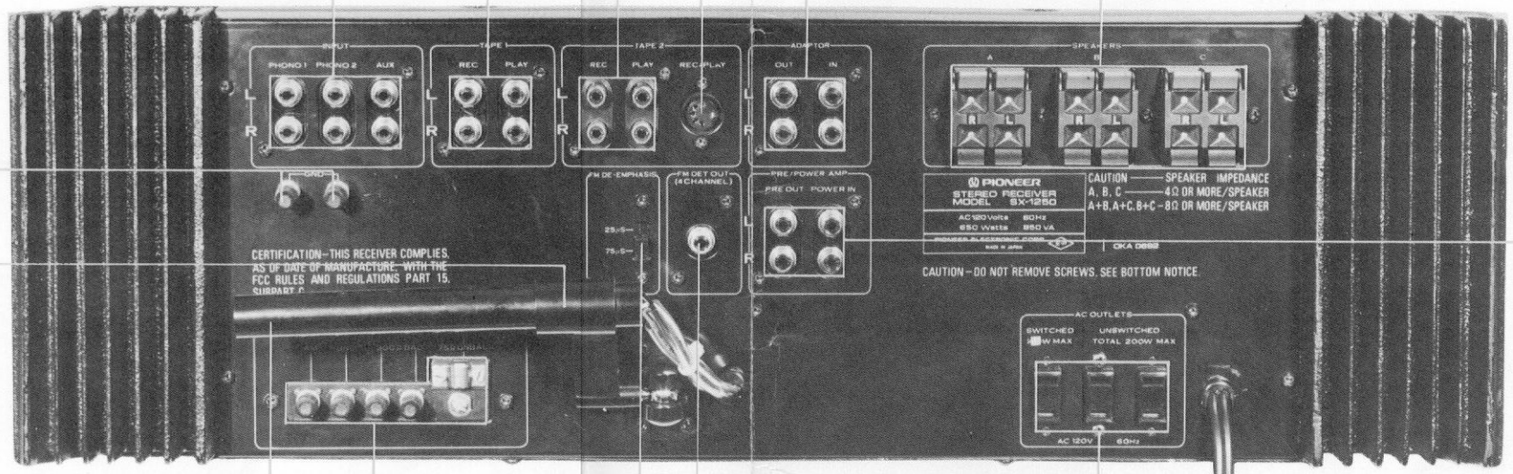

Connector socket 5P (REC/PLAY)
AKP-007

Terminal (ADAPTOR)
AKB-030

Terminal (SPEAKERS)
AKE-014

Terminal (PRE/POWER AMP)
AKB-030

AC power cord
ADG-013

AC socket (AC OUTLETS)
AKP-005

Terminal (FM DET OUT)
AKB-019

8.3 TOP VIEW

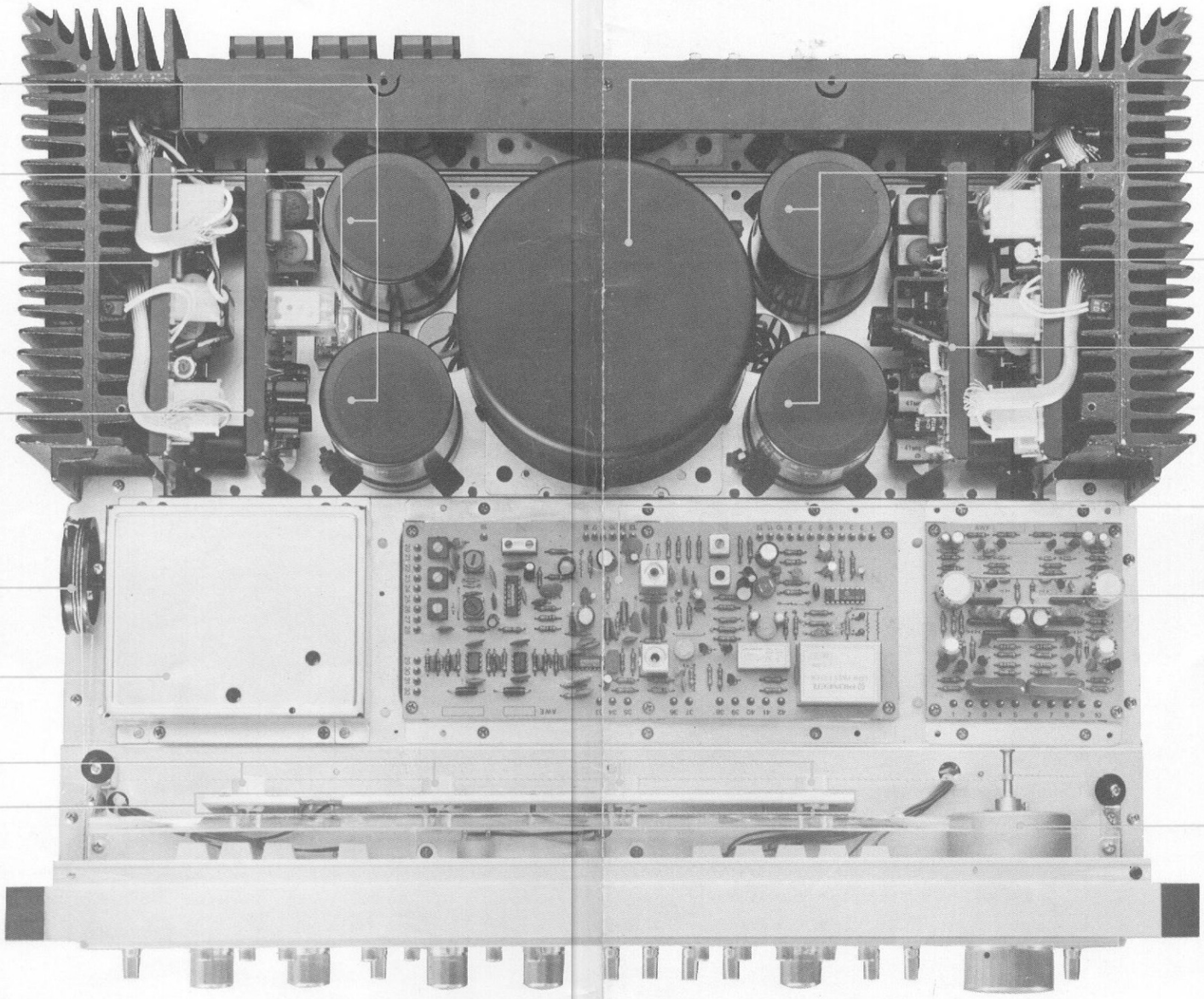
Electrolytic capacitor (22,000μF 80V)
ACH-056
Relay (S2)
ASR-015
Power amplifier assembly
AWH-048
Protection circuit assembly
AWM-091
Tuning drum assembly
AXA-070
FM front end
AWB-023
Lamp assembly (PL1– PL4, 8V 0.3A)
AEL-056
Lamp board assembly
AWX-096
Power transformer
ATT-267
Electrolytic capacitor (22,000μF 80V)
ACH-056
Power amplifier assembly
AWH-048
Stabilizer assembly
AWR-106
Tuner assembly
AWE-068
Equalizer amplifier assembly
AWF-021
Tuning shaft assembly
AXA-111

8.4 BOTTOM VIEW

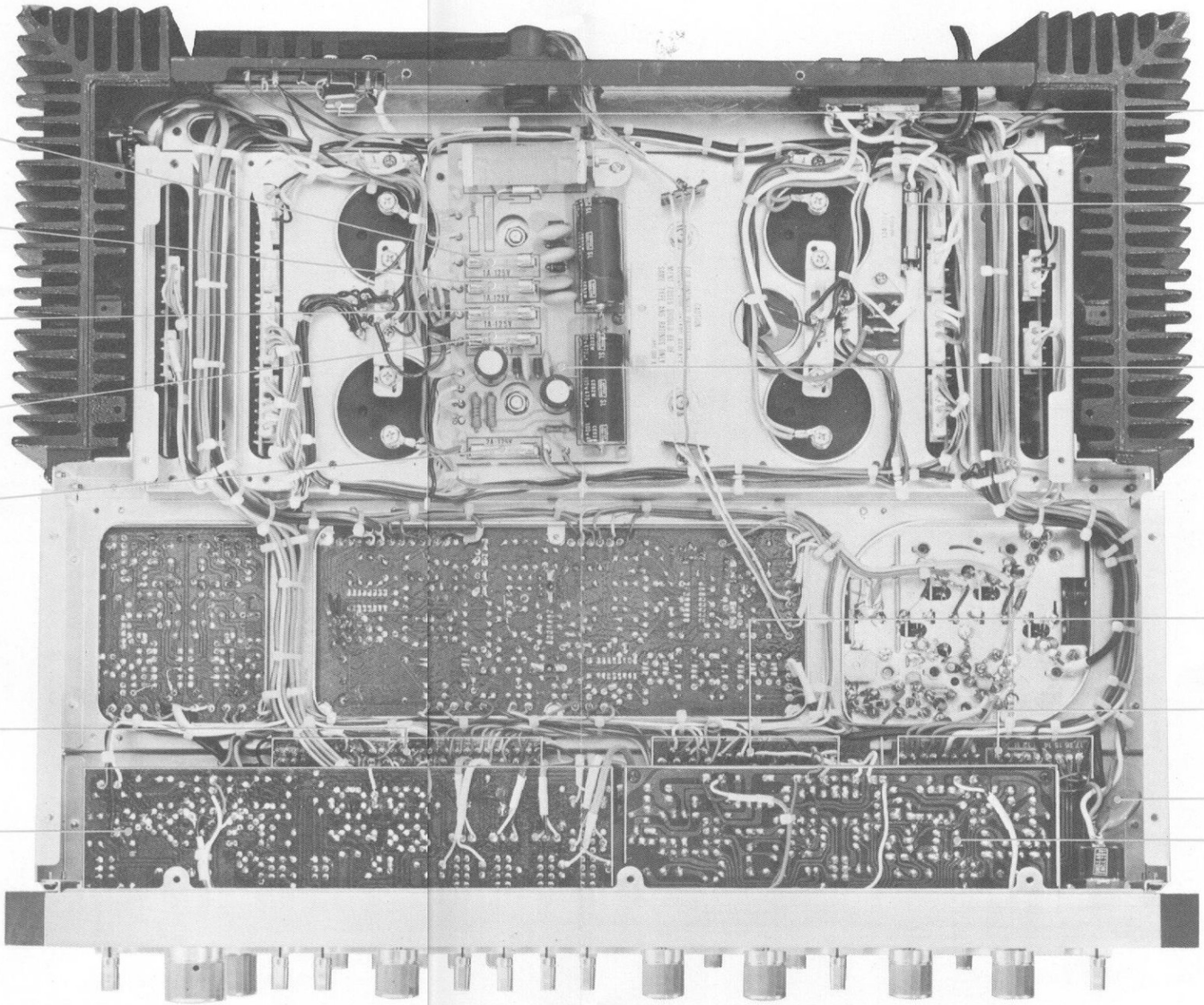

8.5 FRONT VIEW

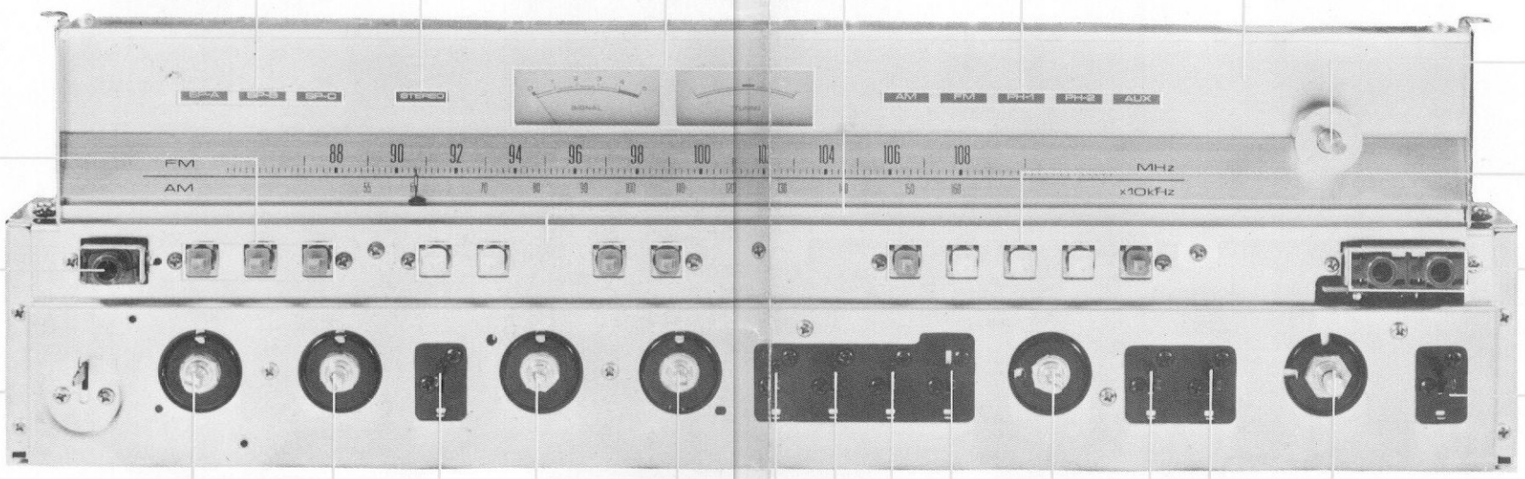

Indicator (STEREO)
AAT-028

Indicator (SP-A, SP-B, SP-C)
AAT-026

Push switch (SPEAKERS)
ASG-094

Phone jack (PHONES)
AKN-010

Lever switch (POWER)
ASK-080

Variable resistor (102k, 5-step, BASS 50Hz)
ACV-165

Variable resistor (102.6k, 11-step, BASS 100Hz)
ACV-166

Lever switch (TONE)
ASK-090

Variable resistor (99k, 11-step, TREBLE 10kHz)
ACV-167

Variable resistor (102k, 5-step, TREBLE 20kHz)
ACV-168

Double meter (SIGNAL/TUNING)
AAW-040

Push switch (FILTER, FM MUTING, MULTIPATH)
ASG-098

Indicator
AAT-027

Dial scale plate
AAG-106

Tuning shaft assembly
AXA-111

Push switch (AM, FM, PHONOI, PHONO2/MIC)
ASG-095

Phone jack (MIC)
AKN-013

Lever switch (MUTING)
ASK-090

Variable resistor (50k, 32-step, VOLUME)
ACV-169

Lever switch (LOUDNESS)
ASK-090

Lever switch (MODE)
ASK-090

Lever switch (TAPE MONITOR 2)
ASK-092

Variable resistor (100k-HB, BALANCE)
ACV-163

Lever switch (TAPE MONITOR 1)
ASK-092

Lever switch (ADAPTOR)
ASK-092

Lever switch (DUPLICATE)
ASK-084

9. ADJUSTMENTS

9.1 AM TUNER

1. Set function switch to AM.
2. Connect AM signal generator through 1k-ohm resistor to AM antenna terminal.
3. Set DUPLICATE switch to OFF and connect an AC voltmeter to TAPE 1 REC jacks.
4. Set AM SG for 400Hz 30% modulation 100dB output.
5. Set SX-1250 dial indication and AM SG frequency for 600kHz.
6. Adjust T3 core for maximum reading on AC voltmeter.
7. Set SX-1250 dial indication and AM SG frequency for 1,400kHz.
8. Adjust TC1 for maximum reading on AC voltmeter.
9. Set AM SG for 30dB output.
10. Set SX-1250 dial indication and AM SG frequency for 600kHz.
11. Adjust T3, T4 and bar antenna core for maximum reading on AC voltmeter.
12. Set SX-1250 dial indication and AM SG frequency for 1,400kHz.
13. Adjust TC1, TC2 and TC3 for maximum reading on AC voltmeter.
14. Repeat steps 10~13 to eliminate variations in AC voltmeter readings.

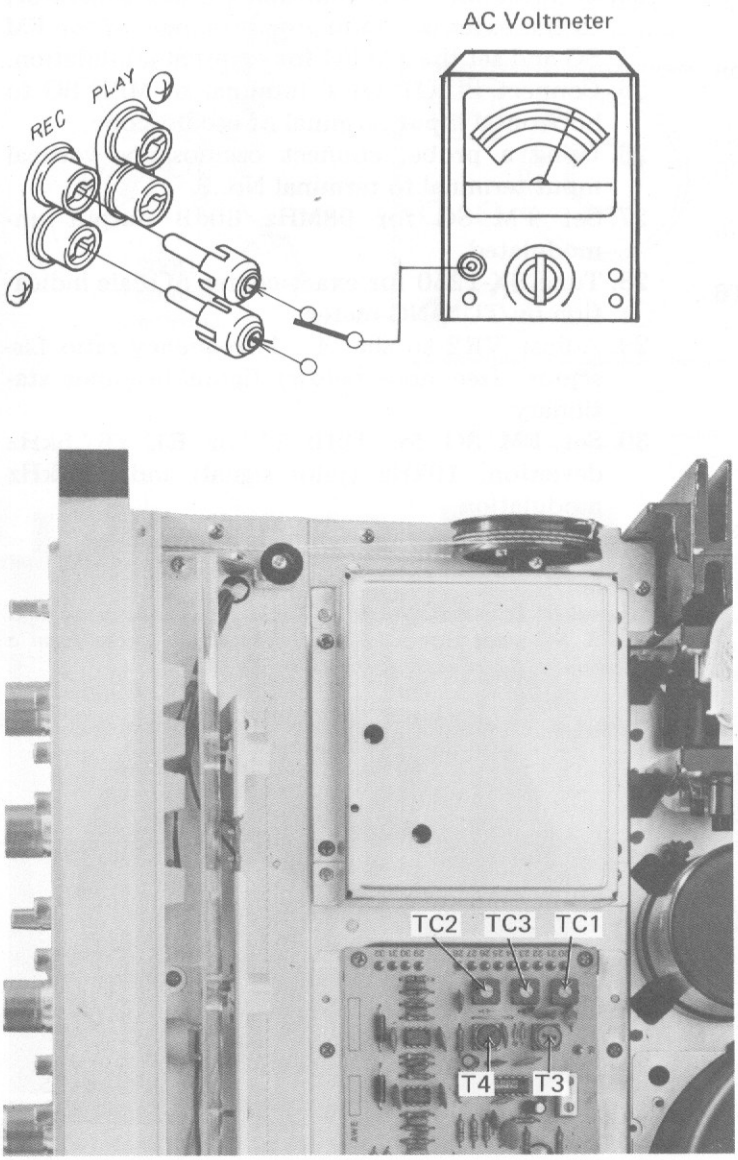

Fig. 30

9.2 FM TUNER

FM Front End

1. Set function switch to FM.
2. Set FM MUTING switch to OFF.
3. Connect FM signal generator through 300-ohm dummy load to 300 ohm FM antenna terminals.
4. Set DUPLICATE switch to OFF and connect AC voltmeter to TAPE 1 REC jacks.
5. Set FM SG for 100dB output at 400Hz and 100% modulation.
6. Set SX-1250 dial indication and FM SG frequency for 87.4MHz.
7. Adjust T5 core for maximum indication on SIGNAL meter.
8. Set FM SG for 8dB output and adjust cores of T1, T2, T3 and T4 for maximum reading on AC voltmeter.
9. Set FM SG for 100dB output.
10. Set SX-1250 dial indication and FM SG frequency for 106MHz.
11. Adjust TC5 for maximum indication on SIGNAL meter.
12. Set FM SG for 8dB output and adjust TC1, TC2, TC3 and TC4 for maximum reading on AC voltmeter.
13. Repeat steps 5~12 to eliminate variations in AC voltmeter readings.
14. After completing above adjustments, adjust T6 core for maximum reading on AC voltmeter.

Bottom View of FM Front End

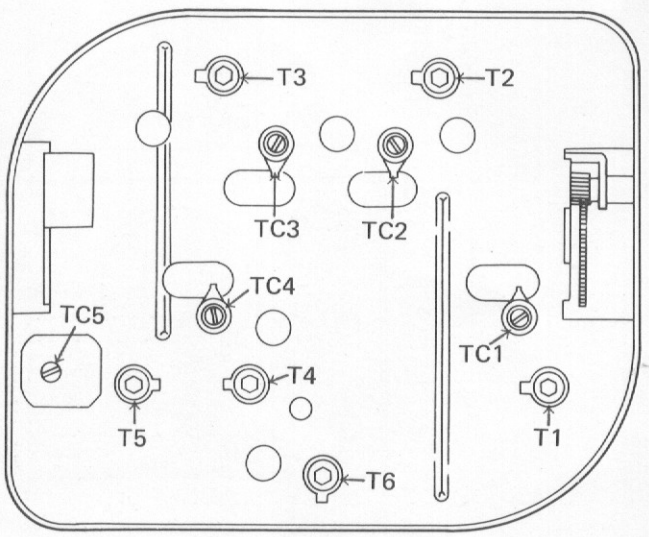

Fig. 31

Tuner Assembly

15. Connect DC voltmeter to terminal No. 43.
16. Turn VR1 and VR3 fully counter-clockwise.
17. Detune SX-1250 to where only noise is received and adjust T1 core for center of scale indication on TUNING meter.
18. Set FM SG for 98MHz 60dB output.
19. Tune SX-1250 for exact center of scale indication on TUNING meter.
20. Adjust T2 upper core for 0V (±10mV) between terminal No. 43 and ground.
21. Adjust T2 lower core for minimum distortion.
22. Repeat steps 20—21 several times.
23. Set FM SG for 100dB output and adjust VR1 so that SIGNAL meter indicates 4.7 on the scale.

Multiplex Decoder

24. Connect MPX SG (multiplex signal generator) to the external modulator terminals of the FM SG and set the FM SG for external modulation.
25. Connect PILOT OUT terminal of MPX SG to horizontal input terminal of oscilloscope.
26. Using a probe, connect oscilloscope vertical input terminal to terminal No. 9.
27. Set FM SG for 98MHz 60dB output unmodulated.
28. Tune SX-1250 for exact center of scale indication on TUNING meter.
29. Adjust VR2 so that 4 : 1 frequency ratio Lissajous' (see note below) figure becomes stationary.
30. Set FM SG for 1kHz (L or R), ±67.5kHz deviation, 19kHz (pilot signal) and ±7.5kHz modulation.
31. Adjust VR3 for minimum L-R crosstalk.

Note:
Signal at terminal No. 9 is 76kHz sawtooth wave and MPX SG pilot out is a 19kHz sinewave. These form a Lissajous' figure such as shown in Fig. 32.

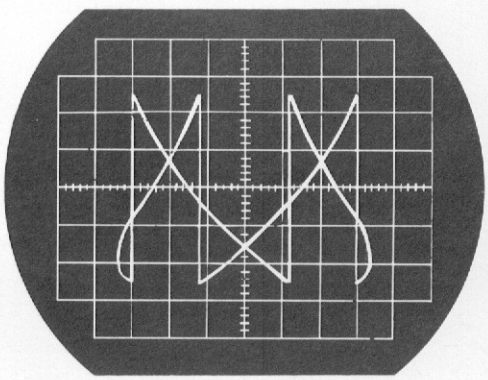

Fig. 32

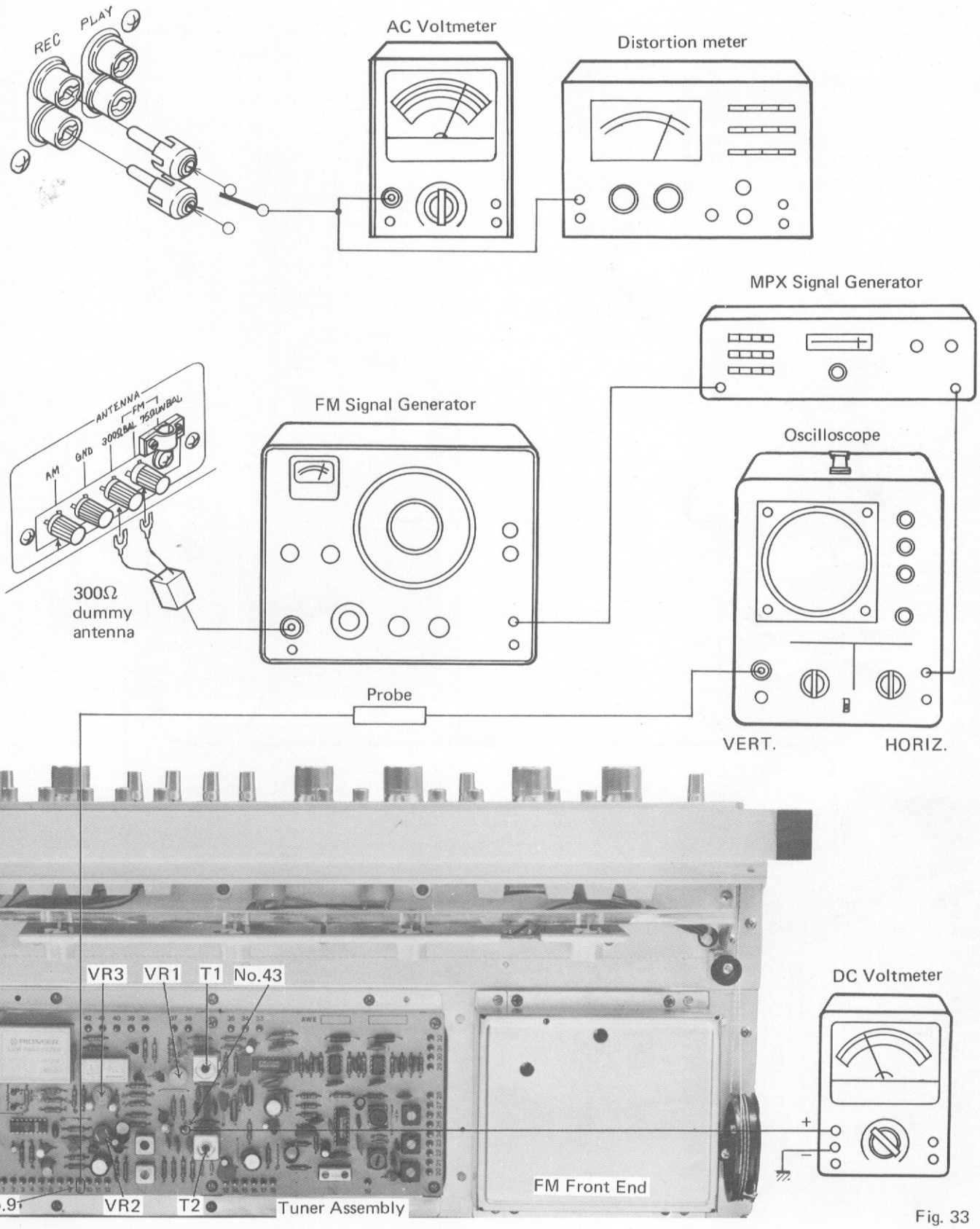
REC
PLAY
AC Voltmeter
Distortion meter
MPX Signal Generator
ANTENNA
AM
GND
300Ω BAL
FM
75Ω UNBAL
FM Signal Generator
Oscilloscope
300Ω
dummy
antenna
Probe
VERT.
HORIZ.
VR3
VR1
T1
No.43
DC Voltmeter
+
−
No.91
VR2
T2
Tuner Assembly
FM Front End

Fig. 33

9.3 POWER AMPLIFIER

1. Turn VR2 fully counter-clockwise before turning on the power.
2. Remove jumper plugs connecting POWER IN and PRE OUT jacks.
3. Connect 5.1 k-ohm resistor to POWER IN jacks.
4. Set power amplifier for no load.
5. Set POWER switch to ON.
6. Adjust VR1 for 0V between terminal No. 9 and ground.
7. Adjust VR2 for 100mV between terminals No. 7 (+) and No. 19 (−).
8. Allow set to warm up for at least 10 minutes, then readjust.

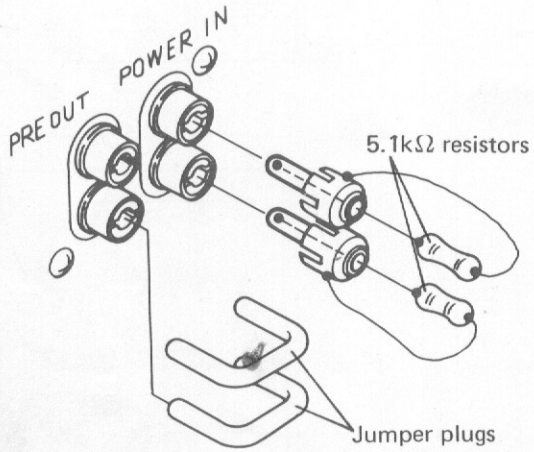

Fig. 34

9.4 STABILIZER

1. Adjust VR1 for 65V between terminals No.17 (+) and No.12 (ground).
2. Adjust VR2 for 65V between terminals No.12 (ground) and No.16 (−).

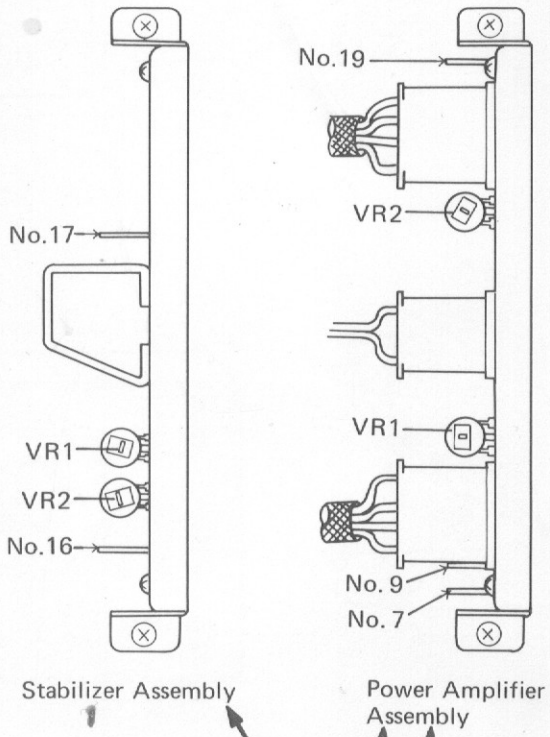

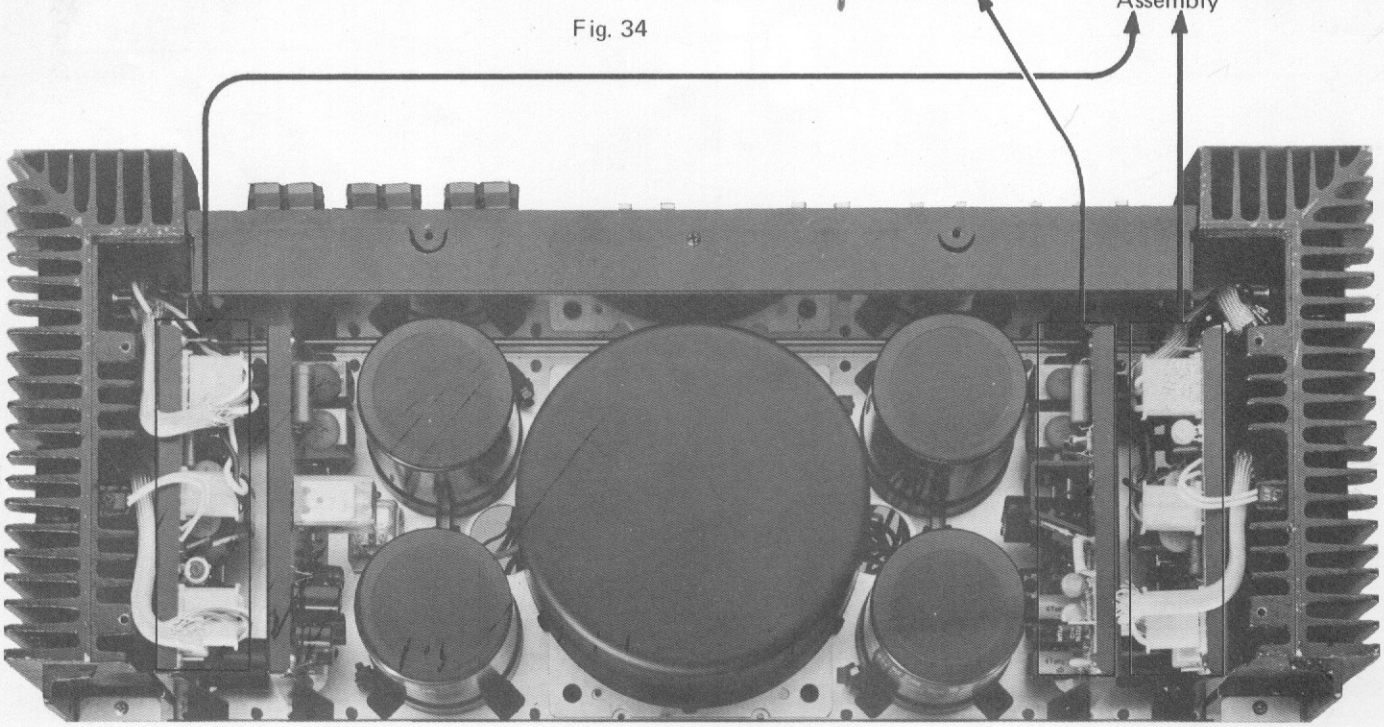

Fig. 35

10. DIAL CORD STRINGING

1. Remove the wooden cover and the front panel.
2. Remove the three screws to detach the blind sash (Fig. 36).
3. Turn tuning drum fully clockwise (as viewed from X direction in Fig. 37).
4. Tie one end of cord to stud on inner section of tuning drum (more easily performed by loosening setscrew and temporarily removing tuning drum from shaft).
5. Route cord through tuning drum cutout, make a half turn around the drum, then route in sequence to pulley A.
6. Wind cord 3 turns clockwise (as viewed from rear panel) around tuning shaft, then route to pulley B—pulley C—pulley D.
7. Wind cord two turns around tuning drum and tie to spring hook so that tension is applied to the cord.
8. Turn TUNING knob and confirm normal cord motion, then trim off excess cord.
9. Turn the tuning knob fully counterclockwise and fix the dial pointer to cord so that it indicates 87.4MHz on the dial scale.

Dial Pointer Installation Caution

Metal portion of dial pointer is plated. If this section is touched directly by hand or fingerprints and other impurities, it is difficult to remove dirt from aventurine finish. As this is not desirable in terms of both appearance and anticorrosion, take extreme care not to touch the metal section when handling the dial pointer.

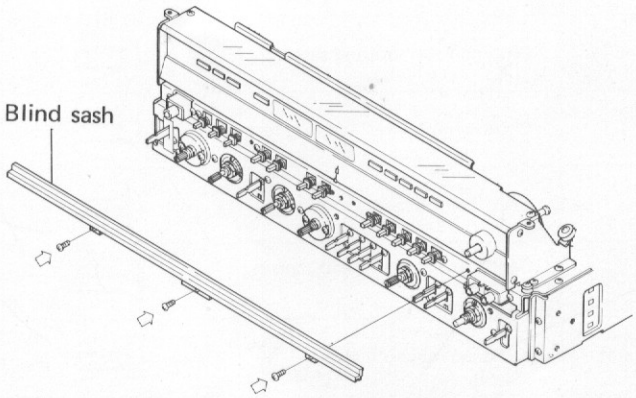

Fig. 36

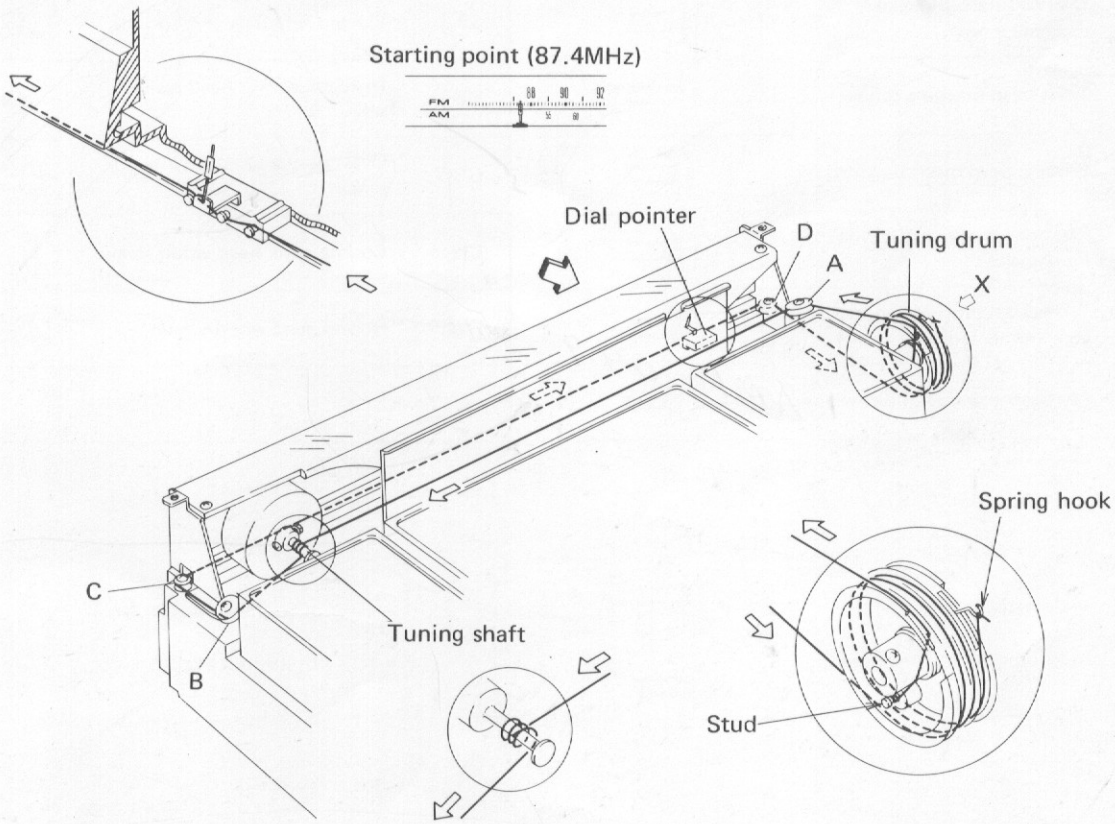

Fig. 37

11. EXPLODED VIEWS

NOMENCLATURE OF SCREWS, WASHERS AND NUTS

The following symbols stand for screws, washers and nuts as shown in exploded view.

Symbol	Description	Shape
RT	Brazier head tapping screw	
PT	Pan head tapping screw	
BT	Binding head tapping screw	
CT	Countersunk head tapping screw	
TT	Truss head tapping screw	
OCT	Oval countersunk head tapping screw	
PM	Pan head machine screw	
CM	Countersunk head machine screw	
OCM	Oval countersunk head machine screw	
TM	Truss head machine screw	
BM	Binding head machine screw	
PSA	Pan head screw with spring lock washer	
PSB	Pan head screw with spring lock washer and flat washer	
PSF	Pan head screw with flat washer	

Symbol	Description	Shape
EW	E type washer	
FW	Flat washer	
SW	Spring lock washer	
N	Nut	
WN	Washer faced nut	
ITW	Internal toothed lock washer	
OTW	Outernal toothed lock washer	
SC	Slotted set screw (Cone point)	
SF	Slotted set screw (Flat point)	
HS	Hexagon socket headless set screw	
OCW	Oval countersunk head wood screw	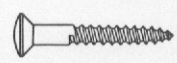
CW	Countersunk head wood screw	
RW	Round head wood screw	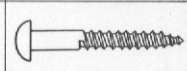

EXAMPLE

PM 3x8

- length in mm (l)
- diameter in mm (d)
- Symbol

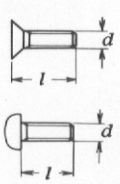

FW 9ϕx1^t

- thickness in mm (t)
- diameter in mm (d)
- Symbol

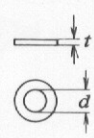

Exterior

NOTE:
Parts indicated in green type cannot be supplied.

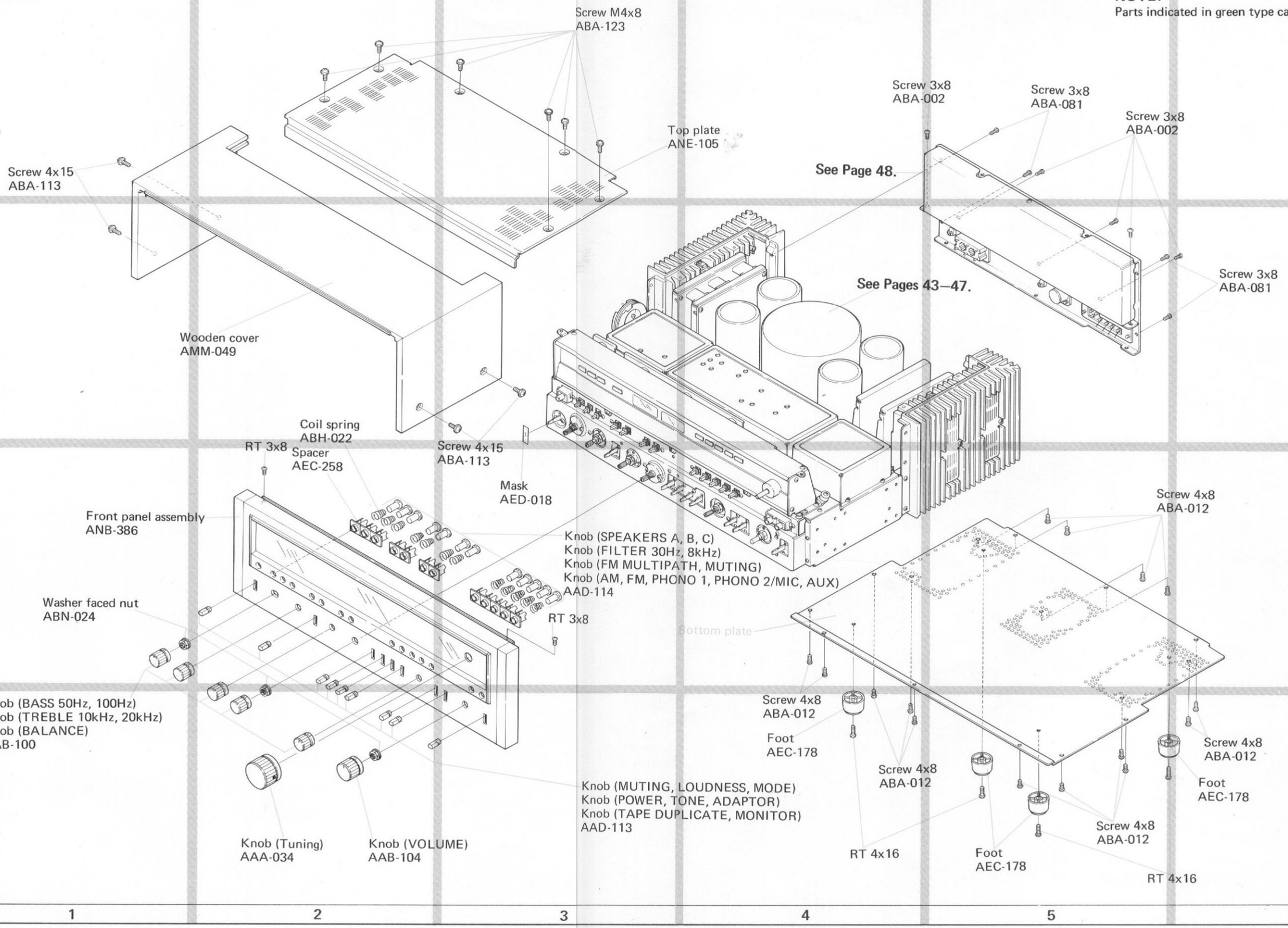

Top Side Component (FRONT)

NOTE:
Parts indicated in green type cannot be supplied.

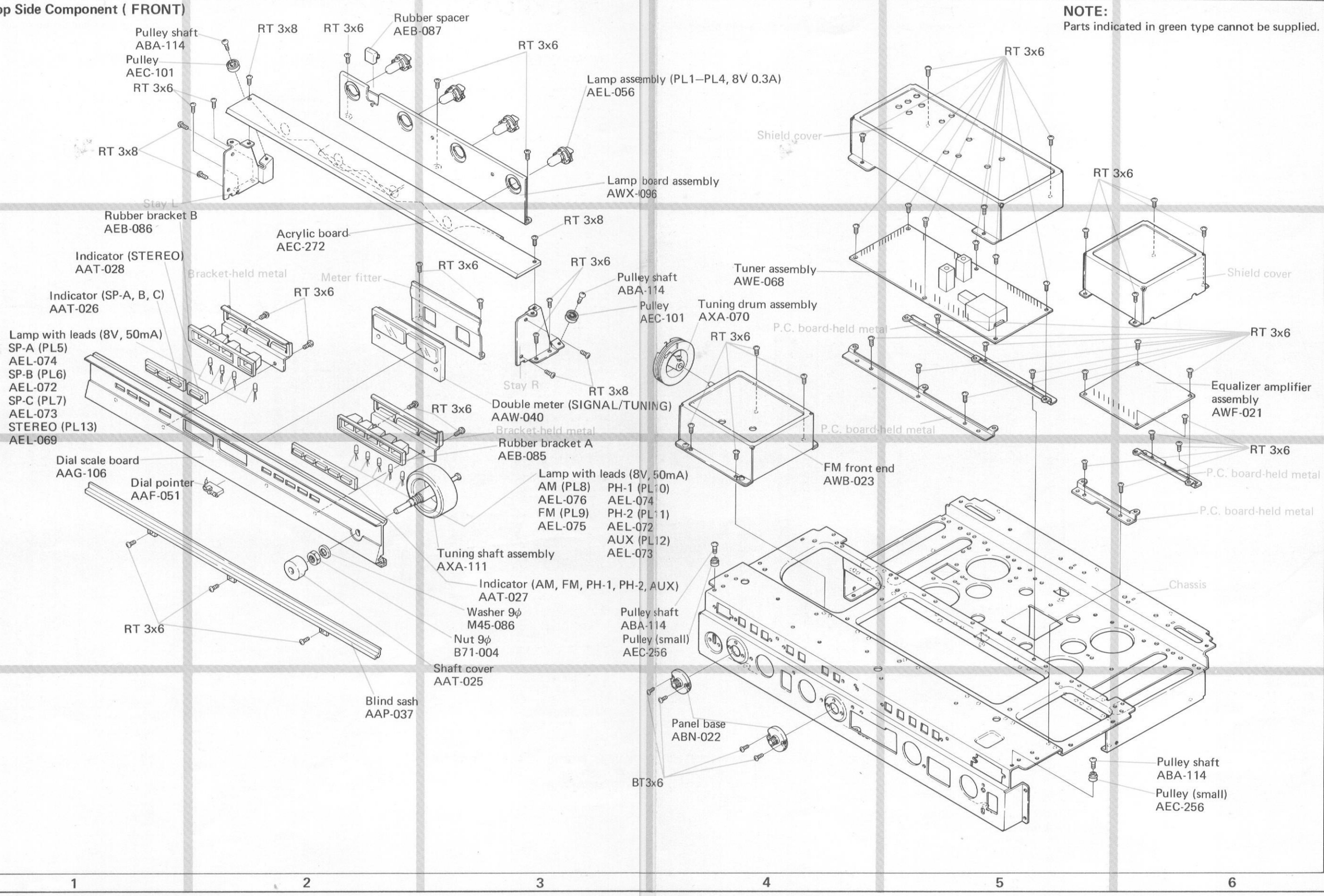

Top Side Component (REAR)

NOTE:
Parts indicated in green type cannot be supplied.

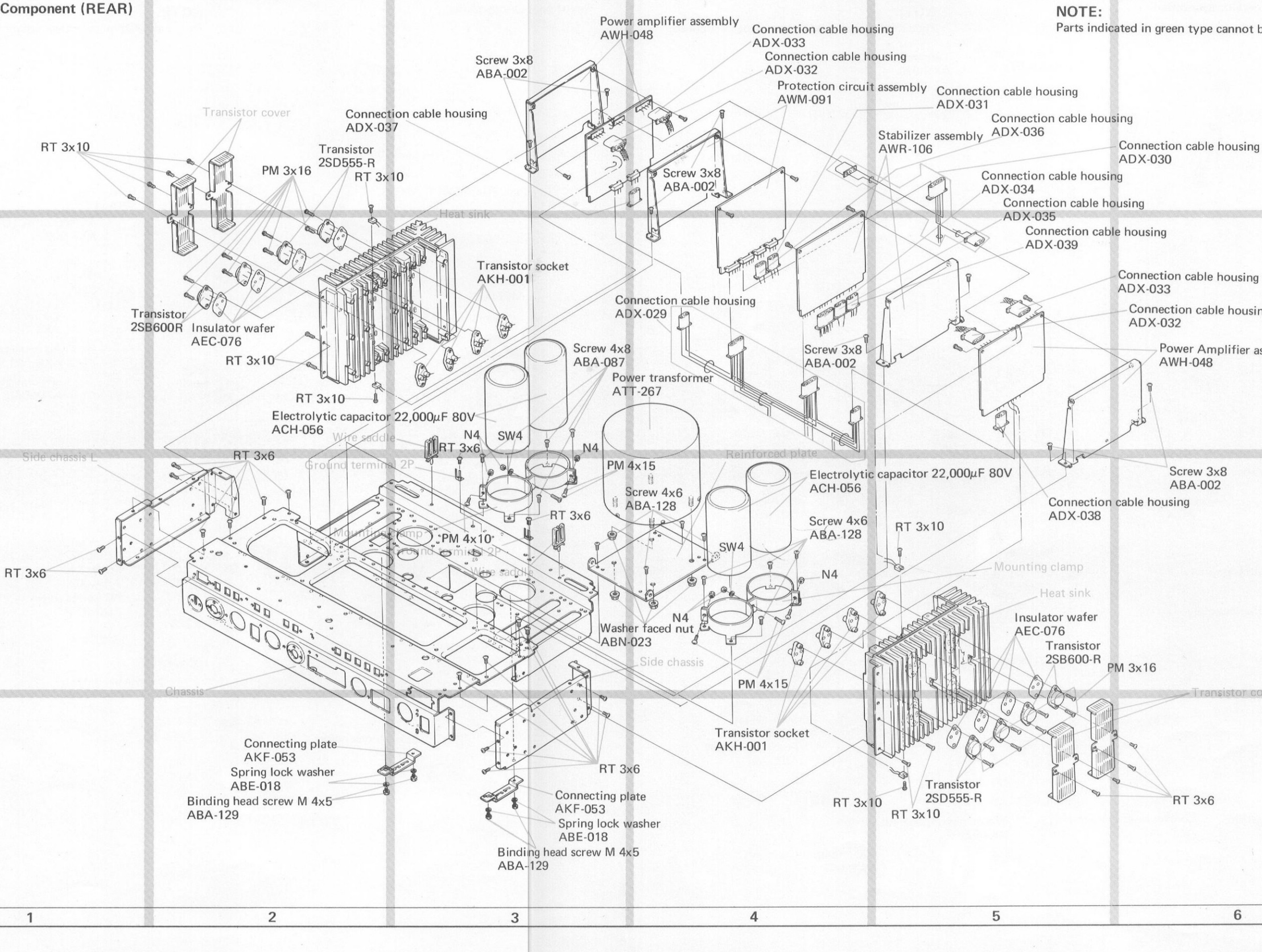

Bottom Side Components

NOTE:
Parts indicated in green type cannot be supplied.

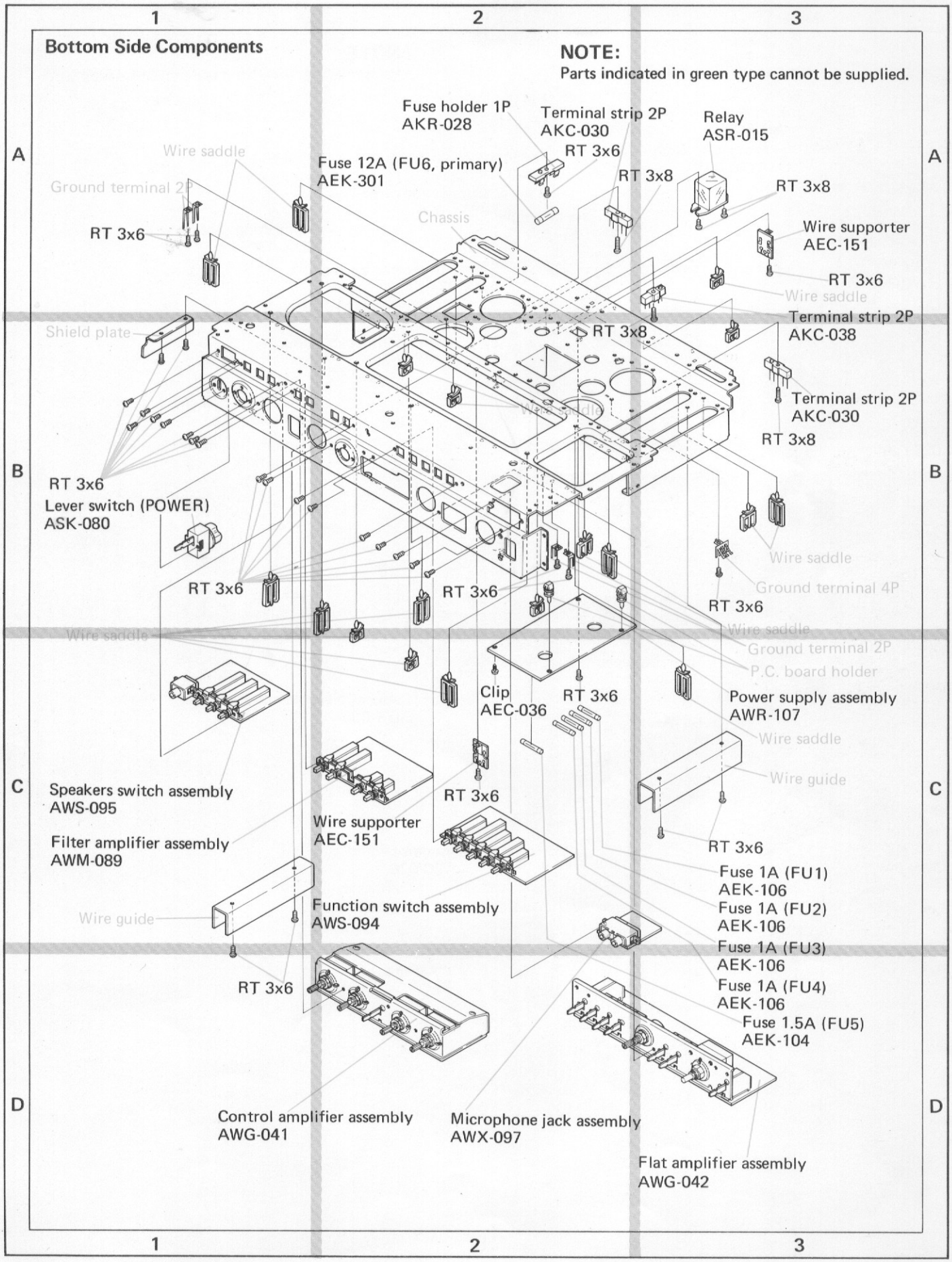

Rear Panel Component

NOTE:
Parts indicated in green type cannot be supplied.

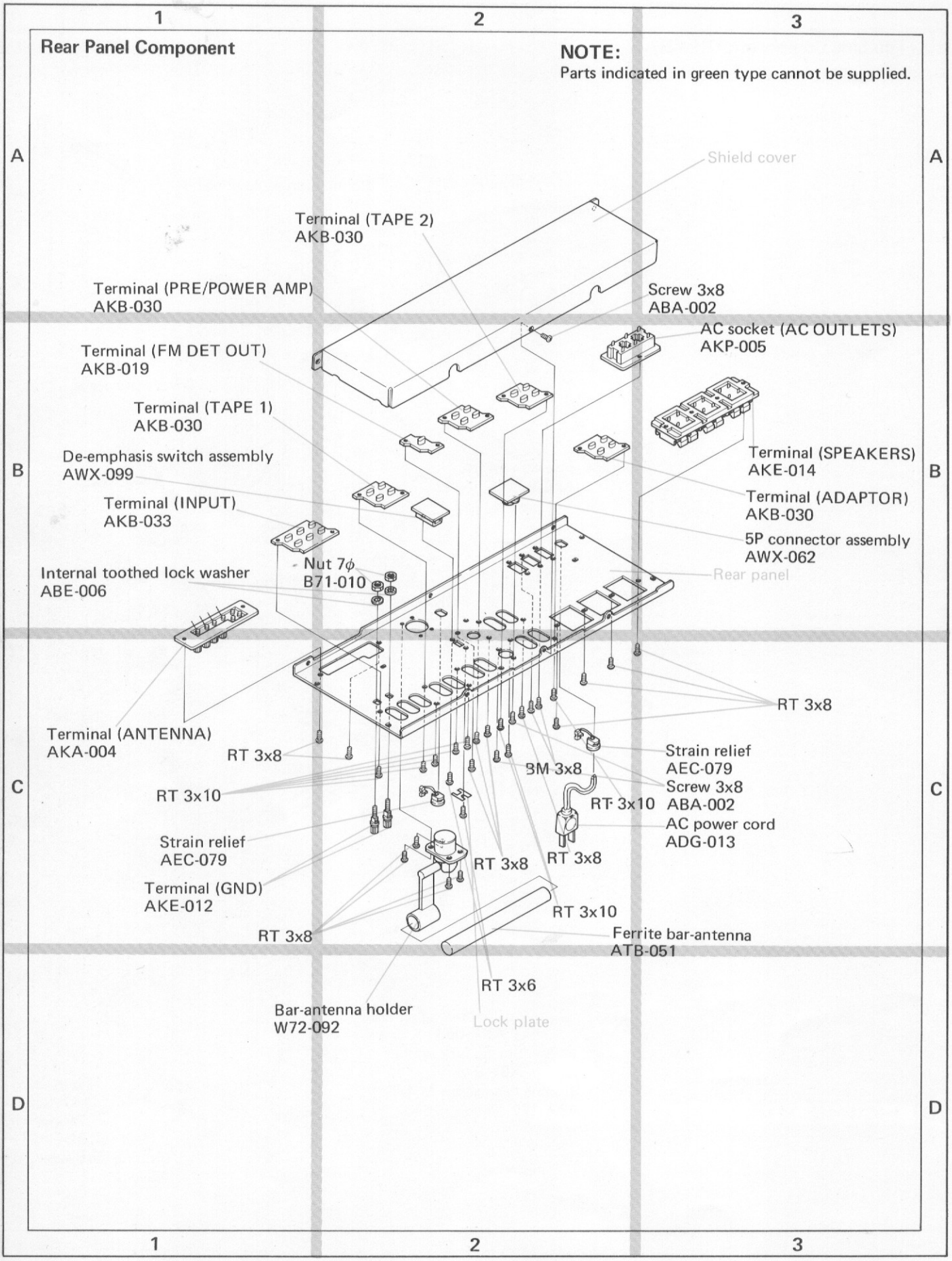

Flat Amplifier Assembly (AWG-042)

NOTE:
Parts indicated in green type cannot be supplied.

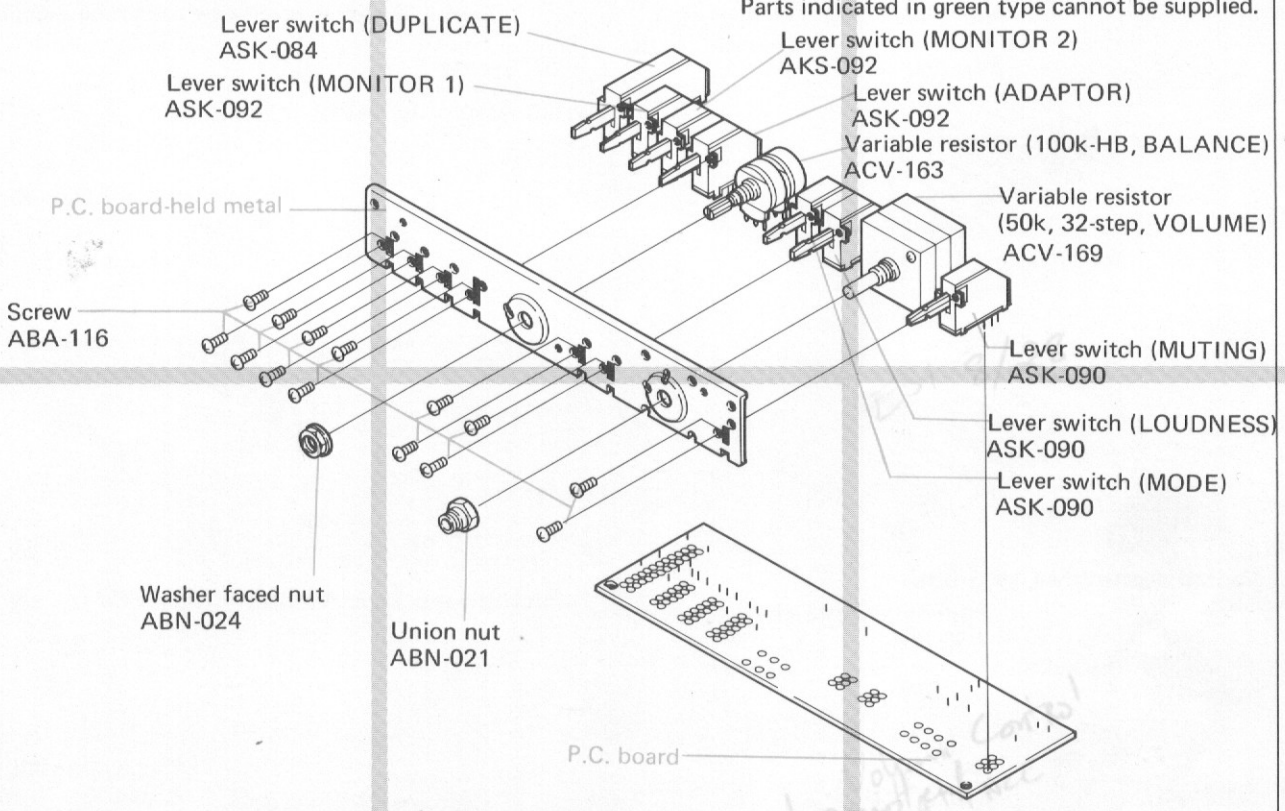

Control Amplifier Assembly (AWG-041)

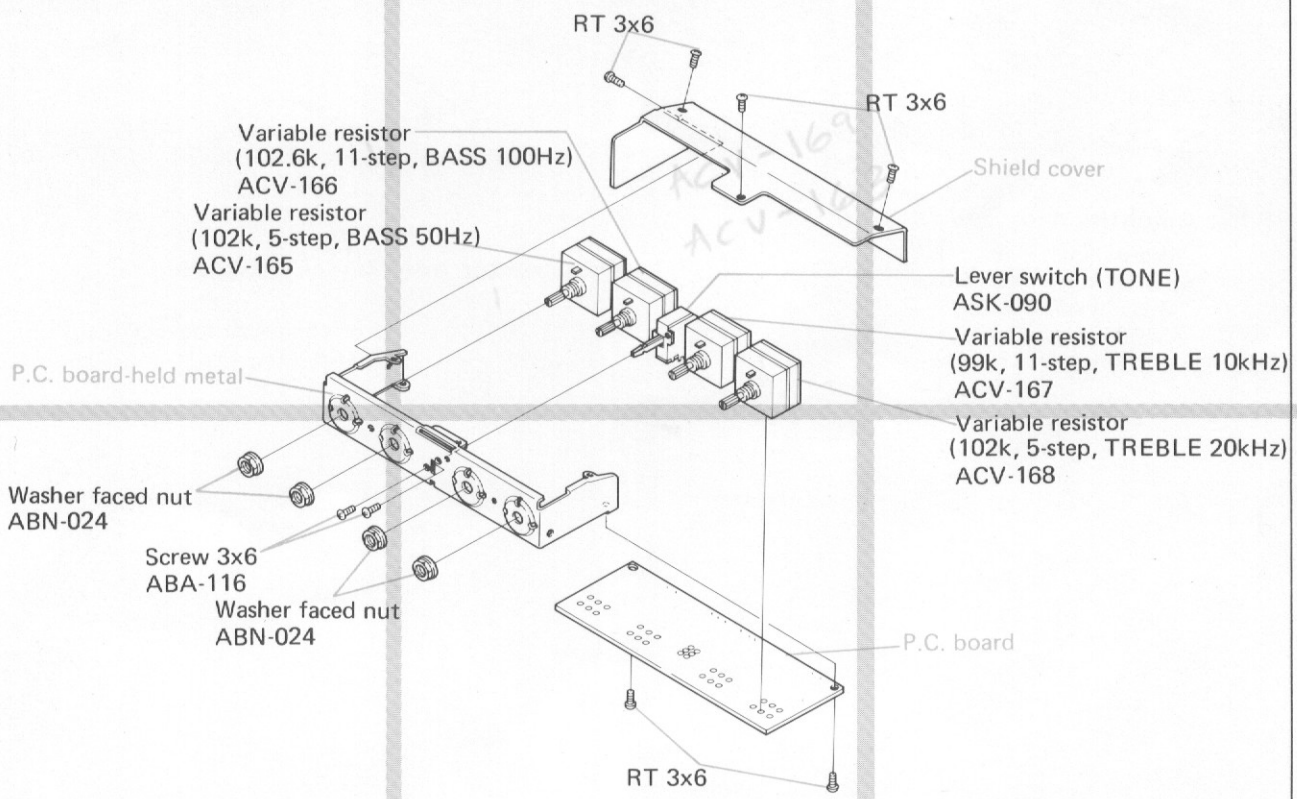

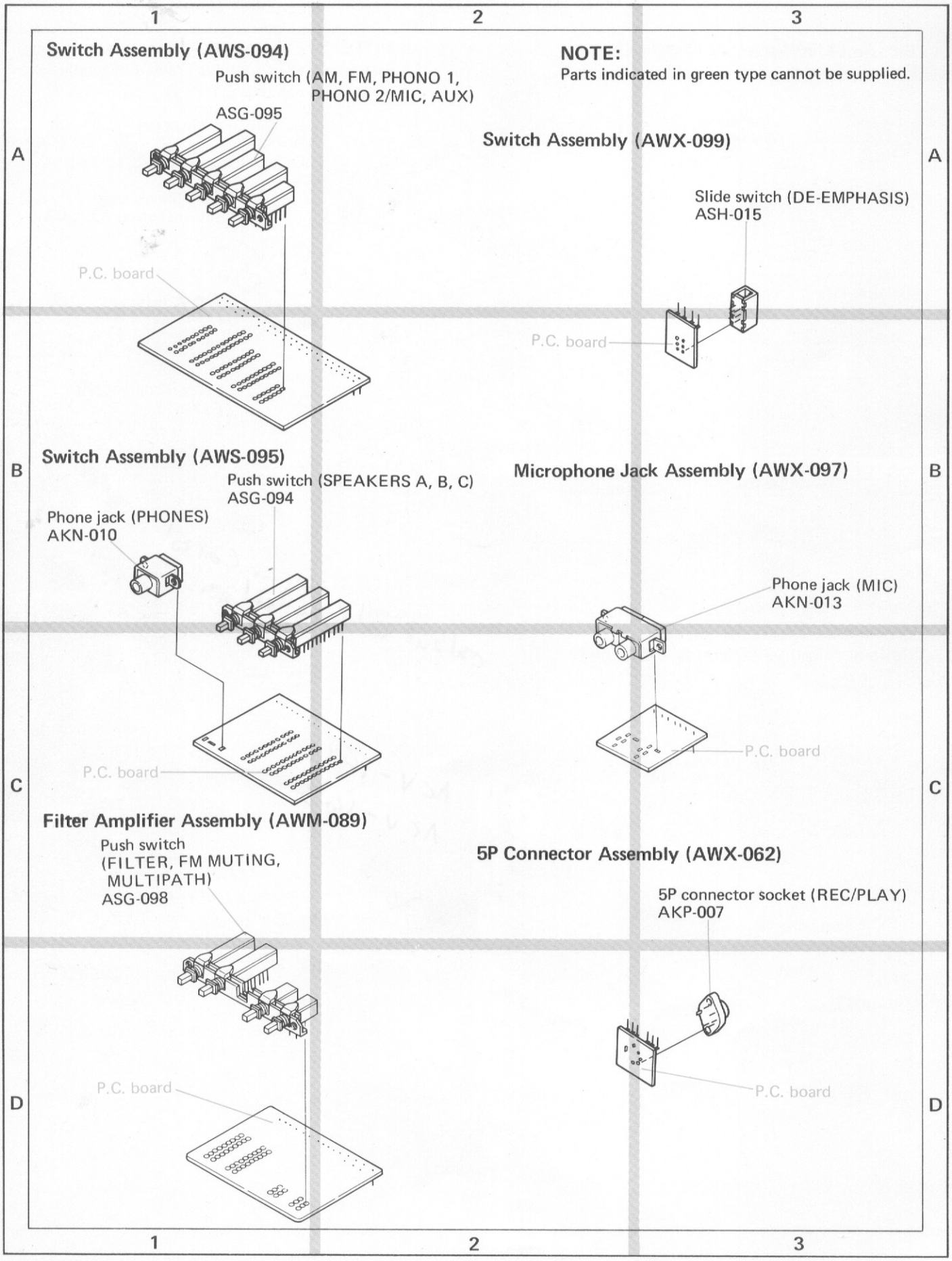
1
2
3
A
B
C
D
Switch Assembly (AWS-094)
Push switch (AM, FM, PHONO 1, PHONO 2/MIC, AUX)
ASG-095
P.C. board
NOTE:
Parts indicated in green type cannot be supplied.
Switch Assembly (AWX-099)
Slide switch (DE-EMPHASIS)
ASH-015
P.C. board
Switch Assembly (AWS-095)
Push switch (SPEAKERS A, B, C)
ASG-094
Phone jack (PHONES)
AKN-010
P.C. board
Microphone Jack Assembly (AWX-097)
Phone jack (MIC)
AKN-013
P.C. board
Filter Amplifier Assembly (AWM-089)
Push switch (FILTER, FM MUTING, MULTIPATH)
ASG-098
P.C. board
5P Connector Assembly (AWX-062)
5P connector socket (REC/PLAY)
AKP-007
P.C. board

12. SCHEMATIC DIAGRAMS, P.C. BOARD PATTERNS AND PARTS LISTS

12.1 MISCELLANEOUS-PARTS

NOTE:
- *Capacitors: in μF unless otherwise noted p:pF*
- *Resistors: in Ω, ¼W unless otherwise noted k:kΩ, M:MΩ*

SEMICONDUCTORS

Symbol	Description	Part No.
Q1	Transistor	2SB600-R
Q2	Transistor	2SB600-R
Q3	Transistor	2SD555-R
Q4	Transistor	2SD555-R
Q5	Transistor	2SB600-R
Q6	Transistor	2SB600-R
Q7	Transistor	2SD555-R
Q8	Transistor	2SD555-R

SWITCHES

Symbol	Description	Part No.
S1	Lever switch (POWER)	ASK-080
S2	Relay	ASR-015

LAMPS

Symbol	Description	Part No.
PL1	Lamp assembly (8V, 0.3A)	AEL-056
PL2	Lamp assembly (8V, 0.3A)	AEL-056
PL3	Lamp assembly (8V, 0.3A)	AEL-056
PL4	Lamp assembly (8V, 0.3A)	AEL-056
PL5	Lamp with leads (8V, 50mA, SP-A)	AEL-074
PL6	Lamp with leads (8V, 50mA, SP-B)	AEL-072
PL7	Lamp with leads (8V, 50mA, SP-C)	AEL-073
PL8	Lamp with leads (8V, 50mA, AM)	AEL-076
PL9	Lamp with leads (8V, 50mA, FM)	AEL-075
PL10	Lamp with leads (8V, 50mA, PH-1)	AEL-074
PL11	Lamp with leads (8V, 50mA, PH-2)	AEL-072
PL12	Lamp with leads (8V, 50mA, AUX)	AEL-073
PL13	Lamp with leads (8V, 50mA, STEREO)	AEL-069

FUSES

Symbol	Description	Part No.
FU1	Fuse 1A	AEK-106
FU2	Fuse 1A	AEK-106
FU3	Fuse 1A	AEK-106
FU4	Fuse 1A	AEK-106
FU5	Fuse 1.5A	AEK-104
FU6	Fuse 12A (primary)	AEK-301

COILS AND TRANSFORMER

Symbol	Description	Part No.
T1	Ferrite balun	T22-025
T2	Ferrite bar-antenna	ATB-051
T3	Power transformer	ATT-267

RESISTOR

Symbol	Description			Part No.
R1	Carbon film	2.2M	½W	RD½PS 225J

CAPACITORS

Symbol	Description			Part No.
C1	Electrolytic	22,000	80V	ACH-056
C2	Electrolytic	22,000	80V	ACH-056
C3	Electrolytic	22,000	80V	ACH-056
C4	Electrolytic	22,000	80V	ACH-056
C5	Ceramic	0.01	50V	CKDYF 103Z 50
C6	Ceramic	0.01	50V	CKDYF 103Z 50
C7	Ceramic	0.01	50V	CKDYF 103Z 50
C8	Ceramic	0.01	50V	CKDYF 103Z 50
C9	Ceramic	0.01	50V	CKDYF 103Z 50
C10	Ceramic	0.01	50V	CKDYF 103Z 50
C11	Ceramic	0.01	50V	CKDYF 103Z 50
C12	Ceramic	0.01	150V (DC1.4kV)	ACG-003
C13	Ceramic	0.01	150V (DC1.4kV)	ACG-003
C14	Electrolytic	100	6V	CEA 101P 6
C18	Mylar	0.1	200V	CQMA 104K 200
C19	Mylar	0.1	200V	CQMA 104K 200

External Appearance of Transistors and ICs

HA1137 HA1138 HA1196	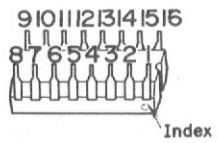
HA1201	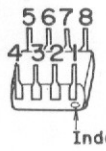
TA7061AP	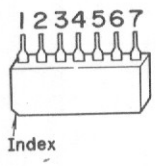
3SK39 3SK45	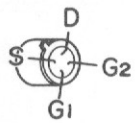
2SB600 2SD555	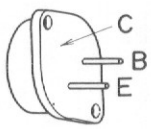
2SA899A 2SC1904	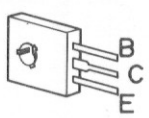
2SC1166	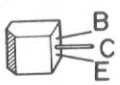
2SK30AW	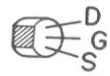
2SA684A 2SC1384	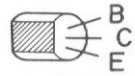
2SB507P 2SB630 2SD313P 2SD325R 2SD610	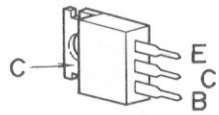
2SA628 2SA720 2SA733 2SA750 2SA858 2SA872A 2SC945A 2SC1318 2SC1439 2SC1775A	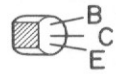
2SC1342	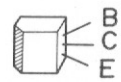
2SA725 2SA726 2SA850 2SC710 2SC869 2SC1312 2SC1313 2SC1735	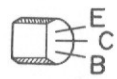

12.2 SCHEMATIC DIAGRAM

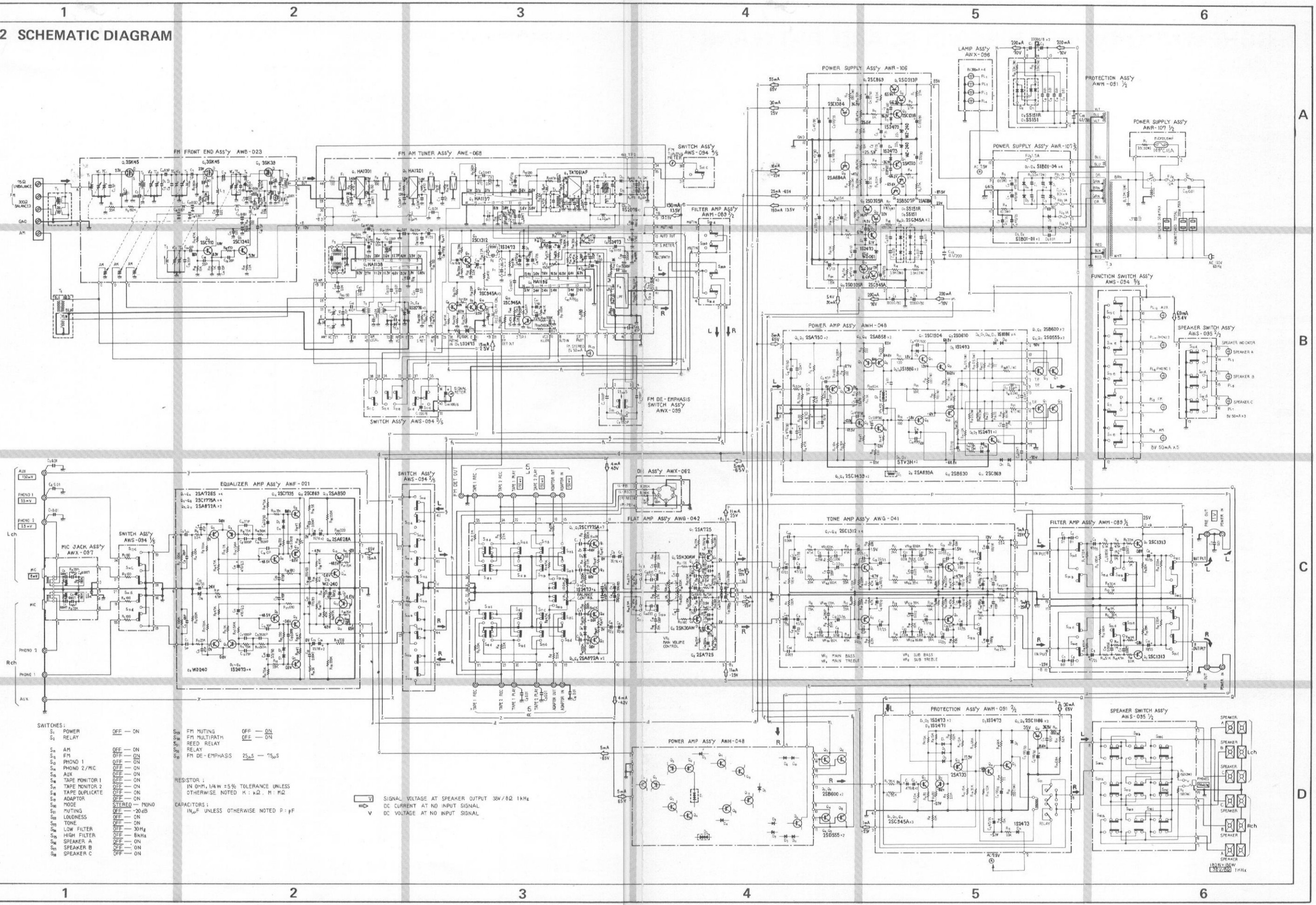
FM FRONT END ASS'y AWB-023
FM AM TUNER ASS'y AWE-068
SWITCH ASS'y AWS-094 3/5
FILTER AMP ASS'y AWM-069 1/2
FM DE-EMPHASIS SWITCH ASS'y AWX-089
SWITCH ASS'y AWS-094 3/5
POWER SUPPLY ASS'y AWR-106
LAMP ASS'y AWX-096
PROTECTION ASS'y AWH-051 1/2
POWER SUPPLY ASS'y AWR-107 1/2
POWER SUPPLY ASS'y AWR-107 2/2
FUNCTION SWITCH ASS'y AWS-054 3/5
SPEAKER SWITCH ASS'y AWS-095 2/2
POWER AMP ASS'y AWH-048
DIN ASS'y AWX-062
EQUALIZER AMP ASS'y AWF-021
SWITCH ASS'y AWS-094 1/5
MIC JACK ASS'y AWX-097
FLAT AMP ASS'y AWG-042
TONE AMP ASS'y AWG-041
FILTER AMP ASS'y AWM-089 1/2
PROTECTION ASS'y AWH-051 2/2
SPEAKER SWITCH ASS'y AWS-095 1/2
POWER AMP ASS'y AWH-048
SWITCHES:
RESISTOR :
CAPACITORS :
SIGNAL VOLTAGE AT SPEAKER OUTPUT 38V / 8Ω 1kHz
DC CURRENT AT NO INPUT SIGNAL
DC VOLTAGE AT NO INPUT SIGNAL

12.3 INTERNAL CIRCUITRY OF INTEGRATED CIRCUITS

HA1137 (FM IF IC)

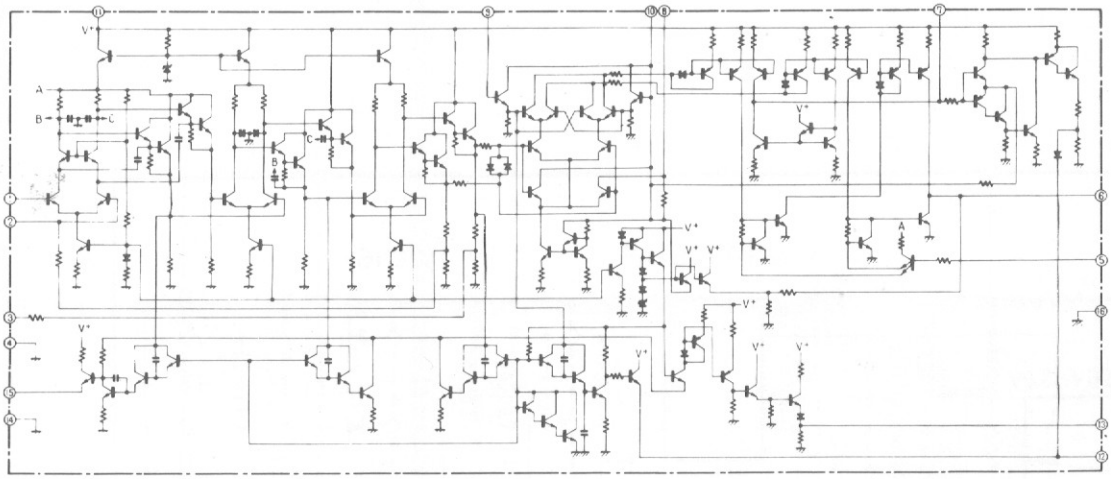

HA1138 (AM IC)

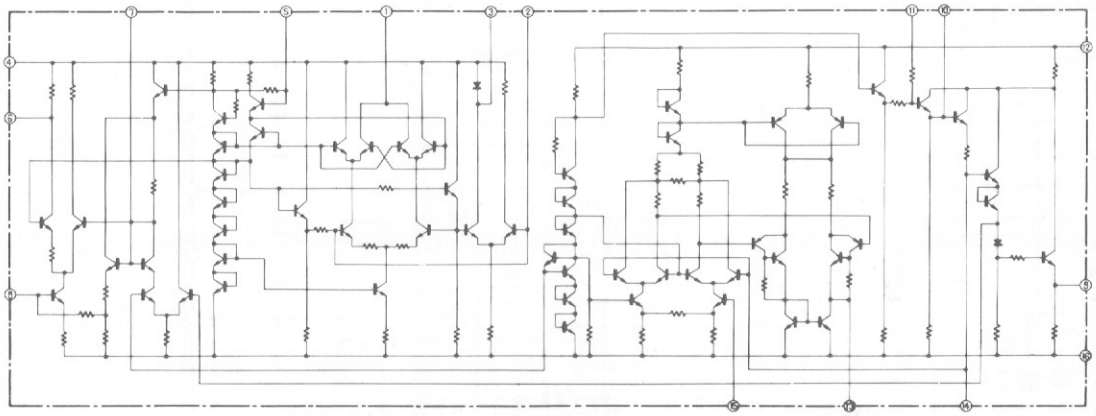

HA1196

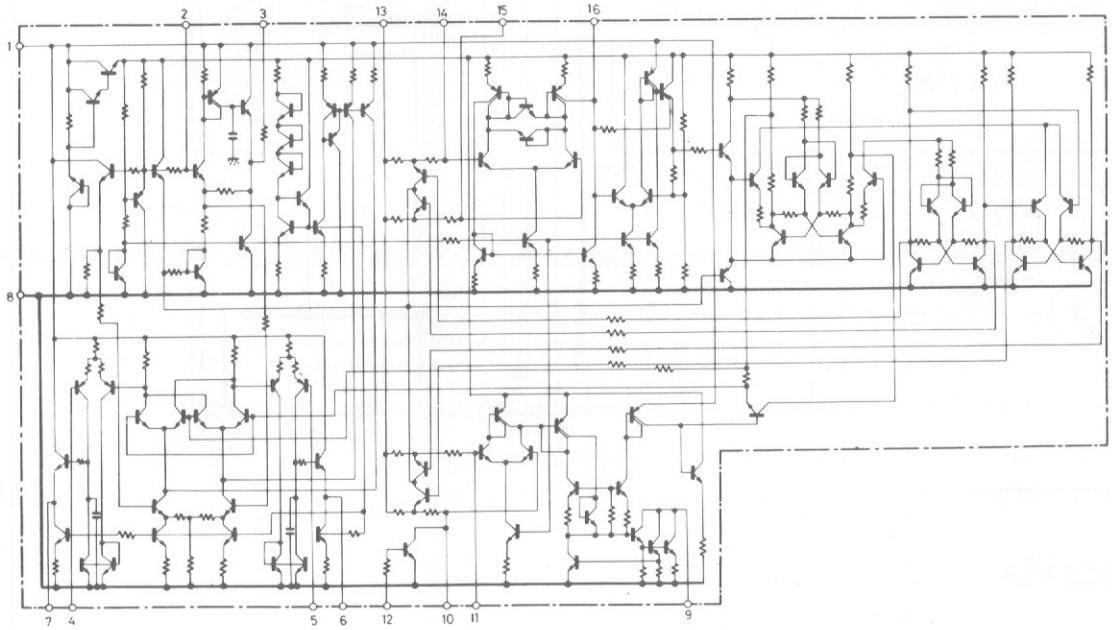

HA1201

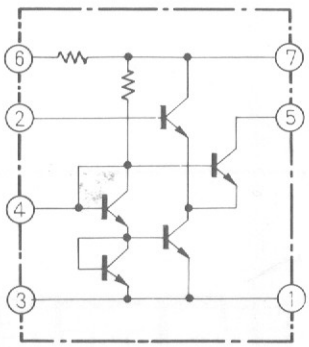

TA7061AP

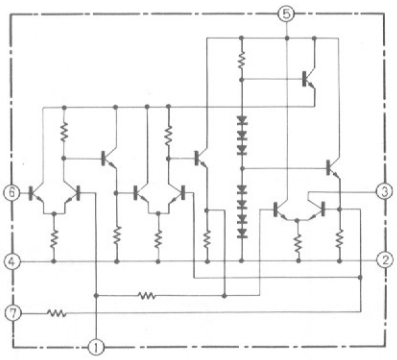

12.4 THE CIRCUIT OF FM FRONT END (AWB-023)

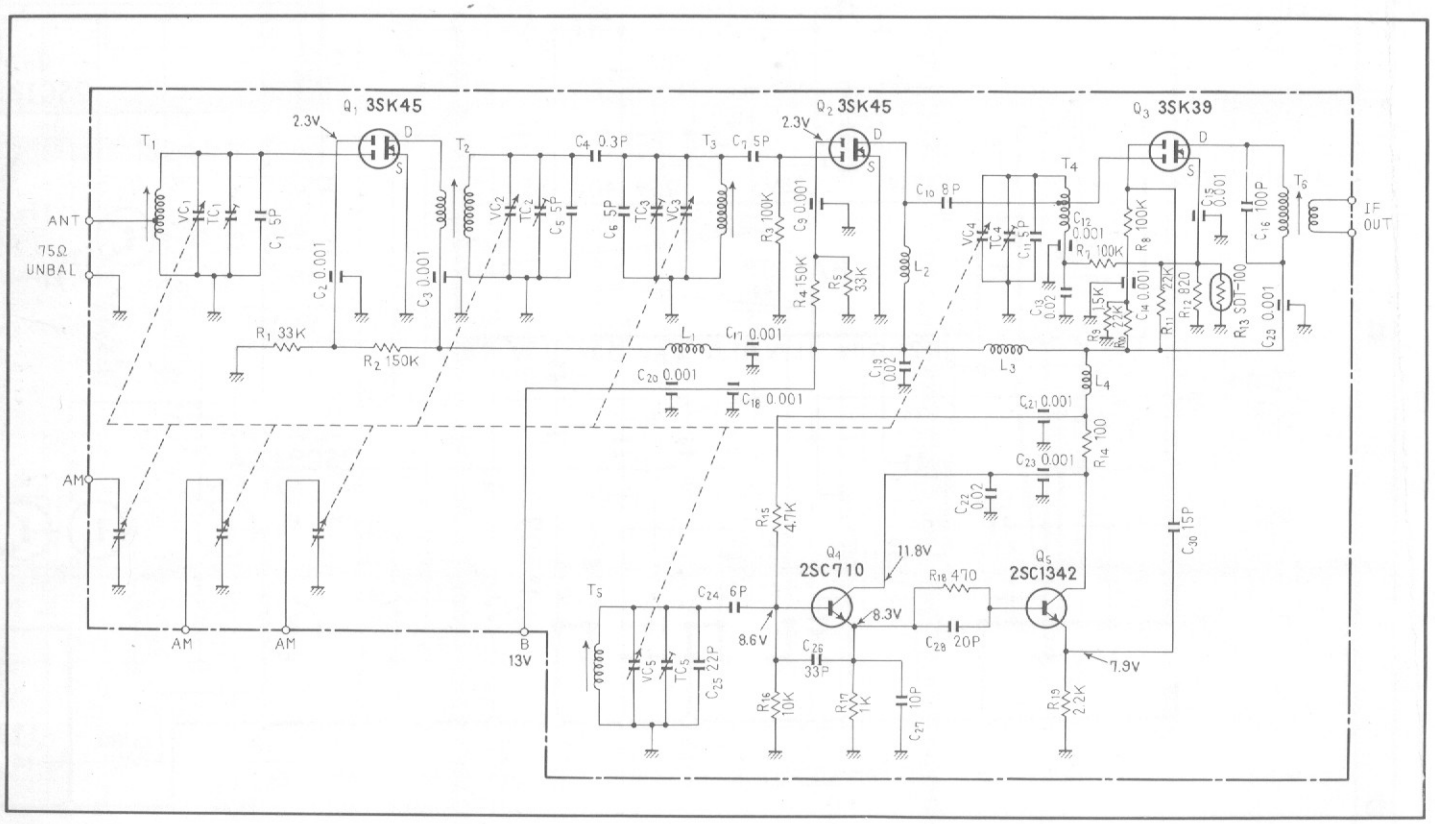

12.5 TUNER ASSEMBLY (AWE-068)

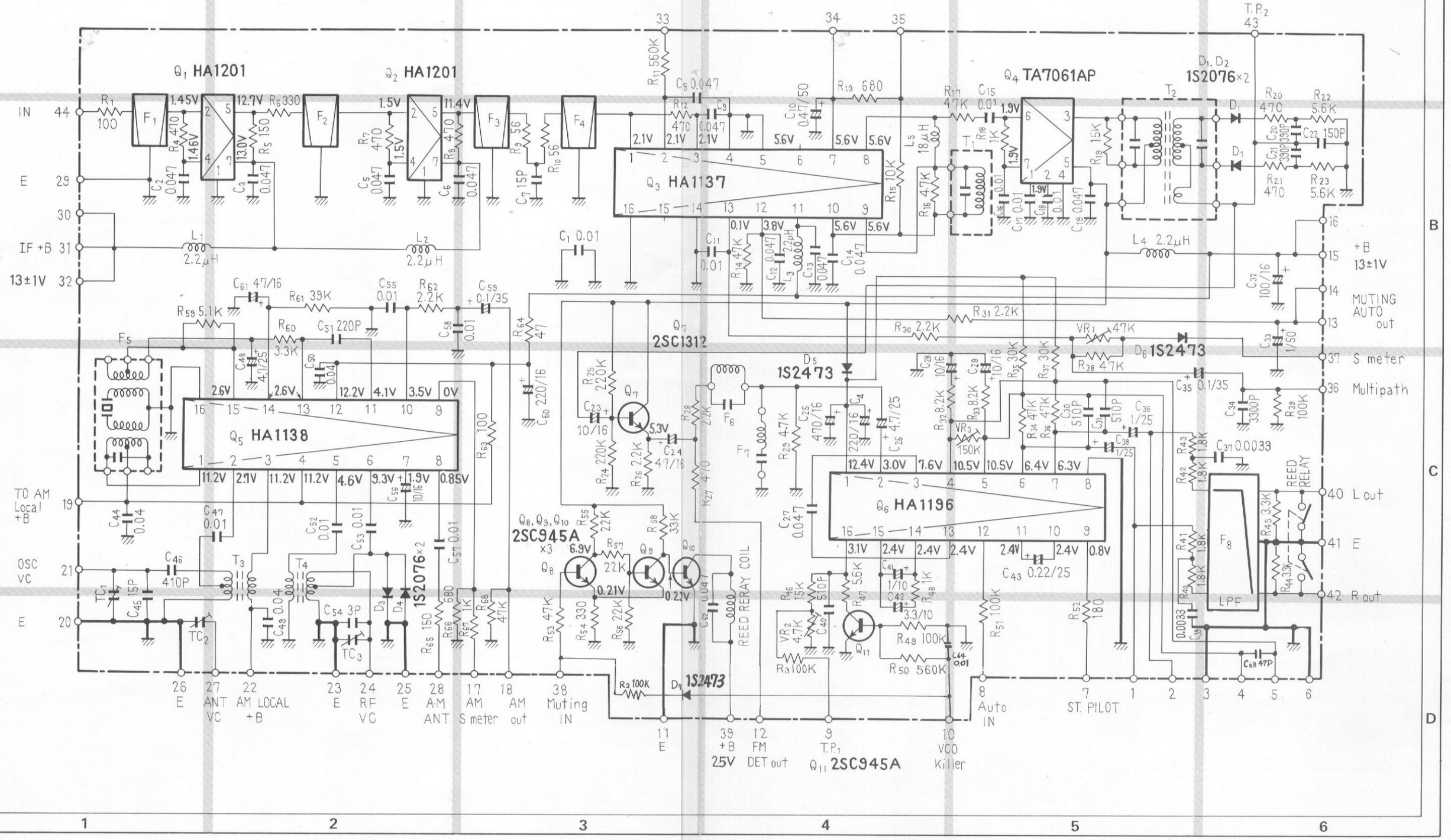

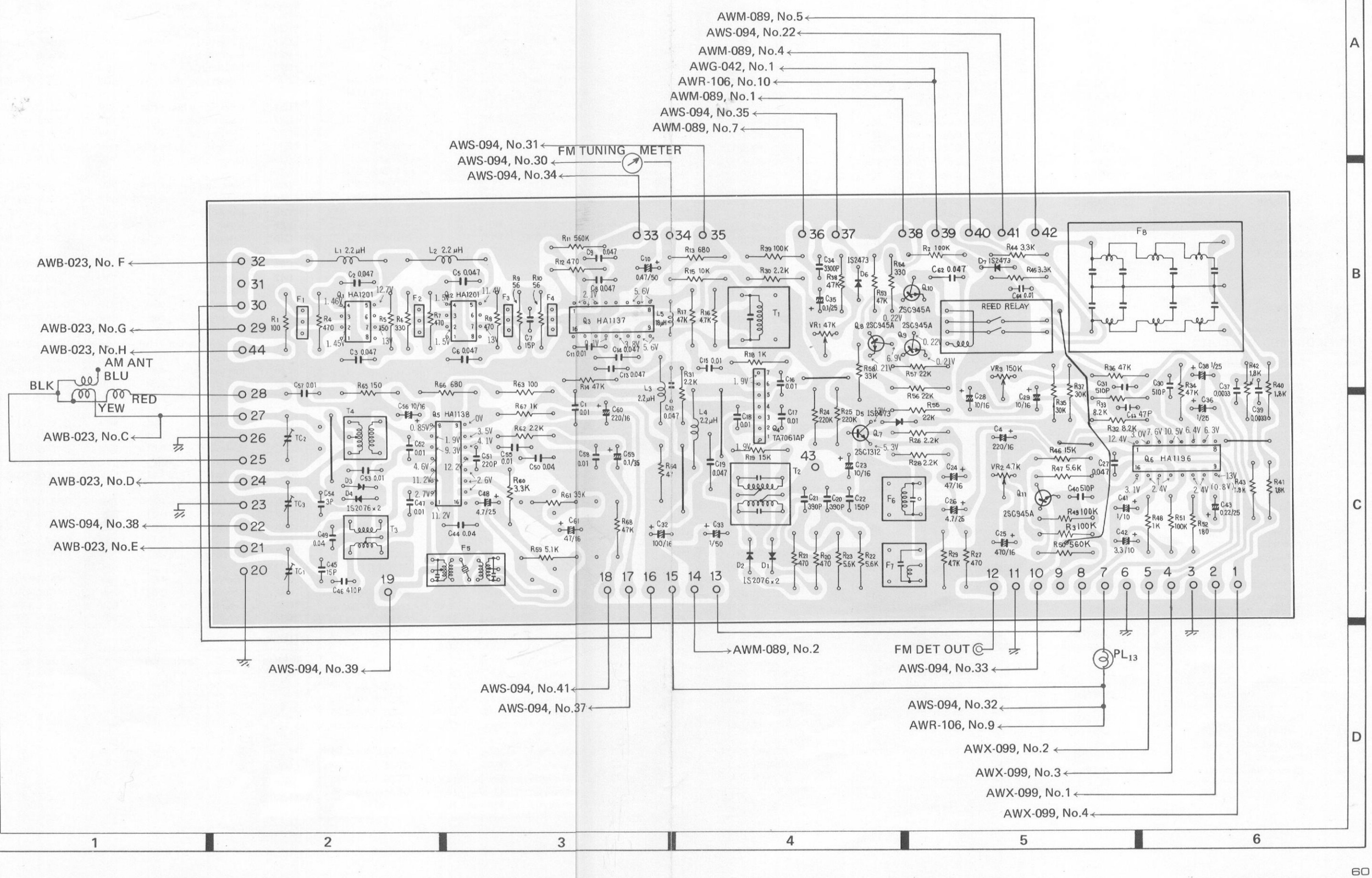
AWM-089, No.5
AWS-094, No.22
AWM-089, No.4
AWG-042, No.1
AWR-106, No.10
AWM-089, No.1
AWS-094, No.35
AWM-089, No.7
AWS-094, No.31
AWS-094, No.30
AWS-094, No.34
FM TUNING METER
AWB-023, No. F
AWB-023, No.G
AWB-023, No.H
AM ANT
BLK
BLU
RED
YEW
AWB-023, No.C
AWB-023, No.D
AWS-094, No.38
AWB-023, No.E
AWS-094, No.39
AWS-094, No.41
AWS-094, No.37
AWM-089, No.2
FM DET OUT
AWS-094, No.33
AWS-094, No.32
AWR-106, No.9
AWX-099, No.2
AWX-099, No.3
AWX-099, No.1
AWX-099, No.4
REED RELAY
HA1201
HA1137
HA1138
HA1196
TA7061AP
2SC945A
2SC1312
1S2076×2
1S2473
PL13

Parts List of Tuner Assembly (AWE-068)

SEMICONDUCTOR

Symbol	Description	Part No.
Q1	IC	HA1201
Q2	IC	HA1201
Q3	IC	HA1137
Q4	IC	TA7061AP
Q5	IC	HA1138
Q6	IC	HA1196
Q7	Transistor	2SC1312-G
Q8	Transistor	2SC945A-Q
Q9	Transistor	2SC945A-Q
Q10	Transistor	2SC945A-Q
Q11	Transistor	2SC945A-Q
D1	Diode	1S2076
D2	Diode	1S2076
D3	Diode	1S2076
D4	Diode	1S2076
D5	Diode	1S2473
D6	Diode	1S2473
D7	Diode	1S2473

TRANSFORMERS AND COILS

Symbol	Description	Part No.
T1	FM IF transformer	ATE-029
T2	FM DET transformer	ATE-013
T3	AM oscillator coil	ATB-019
T4	AF RF coil	ATB-020
F1	FM ceramic filter	ATF-018
F2	FM ceramic filter	ATF-018
F3	FM ceramic filter	ATF-018
F4	FM ceramic filter	ATF-018
F5	AM ceramic filter	ATF-027
F6	Anti-birby filter	ATF-023
F7	Anti-birby filter	ATF-024
F8	FM lowpass filter	ATF-028
L1	RF choke coil 2.2μH	T24-028
L2	RF choke coil 2.2μH	T24-028
L3	RF choke coil 2.2μH	T24-028
L4	RF choke coil 2.2μH	T24-028
L5	RF choke coil 18μH	ATH-007

RESISTORS

Symbol	Description	Part No.
R1	Carbon film 100	RD¼PS 101J
R2	Carbon film 100k	RD¼PS 104J
R3	Carbon film 100k	RD¼PS 104J
R4	Carbon film 470	RD¼PS 471J
R5	Carbon film 150	RD¼PS 151J
R6	Carbon film 330	RD¼PS 331J
R7	Carbon film 470	RD¼PS 471J
R8	Carbon film 470	RD¼PS 471J
R9	Carbon film 56	RD¼PS 560J
R10	Carbon film 56	RD¼PS 560J
R11	Carbon film 560k	RD¼PS 564J
R12	Carbon film 470	RD¼PS 471J
R13	Carbon film 680	RD¼PS 681J
R14	Carbon film 47k	RD¼PS 473J
R15	Carbon film 10k	RD¼PS 103J
R16	Carbon film 4.7k	RD¼PS 472J
R17	Carbon film 47k	RD¼PS 473J
R18	Carbon film 1k	RD¼PS 102J
R19	Carbon film 15k	RD¼PS 153J
R20	Carbon film 470	RD¼PS 471J
R21	Carbon film 470	RD¼PS 471J
R22	Carbon film 5.6k	RD¼PS 562J
R23	Carbon film 5.6k	RD¼PS 562J
R24	Carbon film 220k	RD¼PS 224JNL
R25	Carbon film 220k	RD¼PS 224JNL
R26	Carbon film 2.2k	RD¼PS 222J
R27	Carbon film 470	RD¼PS 471J
R28	Carbon film 2.2k	RD¼PS 222J
R29	Carbon film 4.7k	RD¼PS 472J
R30	Carbon film 2.2k	RD¼PS 222J
R31	Carbon film 2.2k	RD¼PS 222J
R32	Carbon film 8.2k	RD¼PS 822J
R33	Carbon film 8.2k	RD¼PS 822J
R34	Carbon film 47k	RD¼PS 473J
R35	Carbon film 30k	RD¼PS 303J
R36	Carbon film 47k	RD¼PS 473J
R37	Carbon film 30k	RD¼PS 303J
R38	Carbon film 47k	RD¼PS 473J
R39	Carbon film 100k	RD¼PS 104J
R40	Carbon film 1.8k	RD¼PS 182J
R41	Carbon film 1.8k	RD¼PS 182J
R42	Carbon film 1.8k	RD¼PS 182J
R43	Carbon film 1.8k	RD¼PS 182J
R44	Carbon film 3.3k	RD¼PS 332J
R45	Carbon film 3.3k	RD¼PS 332J
R46	Carbon film 15k	RD¼PS 153J
R47	Carbon film 5.6k	RD¼PS 562J
R48	Carbon film 1k	RD¼PS 102J
R49	Carbon film 100k	RD¼PS 104J
R50	Carbon film 560k	RD¼PS 564J
R51	Carbon film 100k	RD¼PS 104J
R52	Carbon film 180	RD¼PS 181J
R53	Carbon film 47k	RD¼PS 473J

Symbol	Description		Part No.
R54	Carbon film	330	RD¼PS 331J
R55	Carbon film	22k	RD¼PS 223J
R56	Carbon film	22k	RD¼PS 223J
R57	Carbon film	22k	RD¼PS 223J
R58	Carbon film	33k	RD¼PS 333J
R59	Carbon film	5.1k	RD¼PS 512J
R60	Carbon film	3.3k	RD¼PS 332J
R61	Carbon film	39k	RD¼PS 393J
R62	Carbon film	2.2k	RD¼PS 222J
R63	Carbon film	100	RD¼PS 101J
R64	Carbon film	47	RD¼PS 470J
R65	Carbon film	150	RD¼PS 151J
R66	Carbon film	680	RD¼PS 681J
R67	Carbon film	1k	RD¼PS 102J
R68	Carbon film	47k	RD¼PS 473J
VR1	Semi-fixed	47k-B	C92-048
VR2	Semi-fixed	4.7k-B	ACP-018
VR3	Semi-fixed	150k-B	ACP-014

CAPACITORS

Symbol	Description			Part No.
TC1	Film trimmer			ACM-002
TC2	Film trimmer			ACM-002
TC3	Film trimmer			ACM-002
C1	Ceramic	0.01	50V	CKDYF 103Z 50
C2	Ceramic	0.047	25V	CKDBC 473Z 25
C3	Ceramic	0.047	25V	CKDBC 473Z 25
C4	Electrolytic	220	16V	CEA 221P 16
C5	Ceramic	0.047	25V	CKDBC 473Z 25
C6	Ceramic	0.047	25V	CKDBC 473Z 25
C7	Ceramic	15p	50V	CCDSL 150K 50
C8	Ceramic	0.047	25V	CKDBC 473Z 25
C9	Ceramic	0.047	25V	CKDBC 473Z 25
C10	Electrolytic	0.47	50V	CEA R47P 50
C11	Ceramic	0.01	50V	CKDYF 103Z 50
C12	Ceramic	0.047	25V	CKDBC 473Z 25
C13	Ceramic	0.047	25V	CKDBC 473Z 25
C14	Ceramic	0.047	25V	CKDBC 473Z 25
C15	Ceramic	0.01	50V	CKDYF 103Z 50
C16	Ceramic	0.01	50V	CKDYF 103Z 50
C17	Ceramic	0.01	50V	CKDYF 103Z 50
C18	Ceramic	0.01	50V	CKDYF 103Z 50
C19	Ceramic	0.047	25V	CKDBC 473Z 25
C20	Ceramic	390p	50V	CCKSL 391K 50
C21	Ceramic	390p	50V	CCDSL 391K 50
C22	Ceramic	150p	50V	CCDSL 151K 50
C23	Electrolytic	10	16V	CSZA 100M 16
C24	Electrolytic	47	16V	CEANL 470P 16
C25	Electrolytic	470	16V	CEA 471P 16

Symbol	Description			Part No.
C26	Electrolytic	4.7	25V	CEANL 4R7P 25
C27	Mylar	0.047	50V	CQMA 473J 50
C28	Electrolytic	10	16V	CEANL 100P 16
C29	Electrolytic	10	16V	CEANL 100P 16
C30	Polystyrene film	510p	50V	CQSA 511J 50
C31	Polystyrene film	510p	50V	CQSA 511J 50
C32	Electrolytic	100	16V	CEA 101P 16
C33	Electrolytic	1	50V	CEA 010P 50
C34	Ceramic	0.0033	50V	CKDYA 332J 50
C35	Electrolytic	0.1	35V	CSZA 0R1M 35
C36	Electrolytic	1	25V	CEANL 010P 25
C37	Mylar	0.0033	50V	CQMA 332J 50
C38	Electrolytic	1	25V	CEANL 010P 25
C39	Mylar	0.0033	50V	CQMA 332J 50
C40	Polystyrene film	510p	50V	CQSH 511J 50
C41	Electrolytic	1	10V	CSSA 010M 10
C42	Electrolytic	3.3	10V	CSSA 3R3M 10
C43	Electrolytic	0.22	25V	CSSA R22M 25
C44	Ceramic	0.04	50V	CKDYF 403Z 50
C45	Ceramic	15p	50V	CCDWK 150K 50
C46	Polystyrene film	410p	50V	CQSA 411J 50
C47	Ceramic	0.01	50V	CKDYA 103J 50
C48	Electrolytic	4.7	25V	CEA 4R7P 25
C49	Ceramic	0.04	50V	CKDYF 403Z 50
C50	Ceramic	0.04	50V	CKDYF 403Z 50
C51	Ceramic	220p	50V	CCDSL 221K 50
C52	Ceramic	0.01	50V	CKDYF 103Z 50
C53	Ceramic	0.01	50V	CKDYF 103Z 50
C54	Ceramic	3p	50V	CCDSH 030D 50
C55	Ceramic	0.01	50V	CKDYF 103Z 50
C56	Electrolytic	10	16V	CEA 100P 16
C57	Ceramic	0.01	50V	CKDYF 103Z 50
C58	Ceramic	0.01	50V	CKDYF 103Z 50
C59	Electrolytic	0.1	35V	CSZA 0R1M 35
C60	Electrolytic	220	16V	CEA 221P 16
C61	Electrolytic	47	16V	CEA 470P 16
C62	Ceramic	0.047	25V	CKDBC 473Z 25
C63	Ceramic	47p	50V	CCDSL 470K 50
C64	Ceramic	0.01	50V	CKDYF 103Z 50

OTHER

Symbol	Description	Part No.
	Reed relay	ASR-005

12.6 DE-EMPHASIS SWITCH ASSEMBLY (AWX-099)

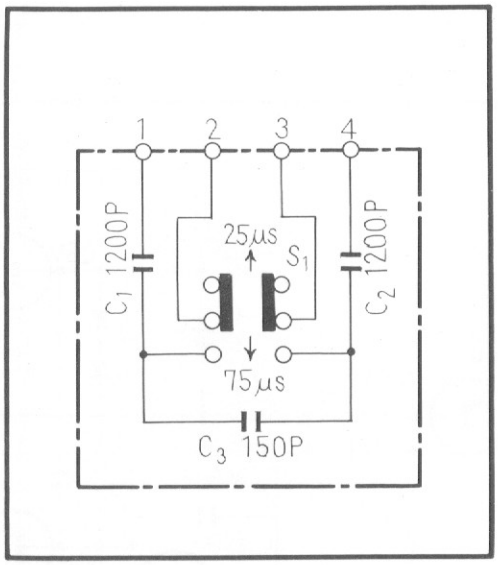

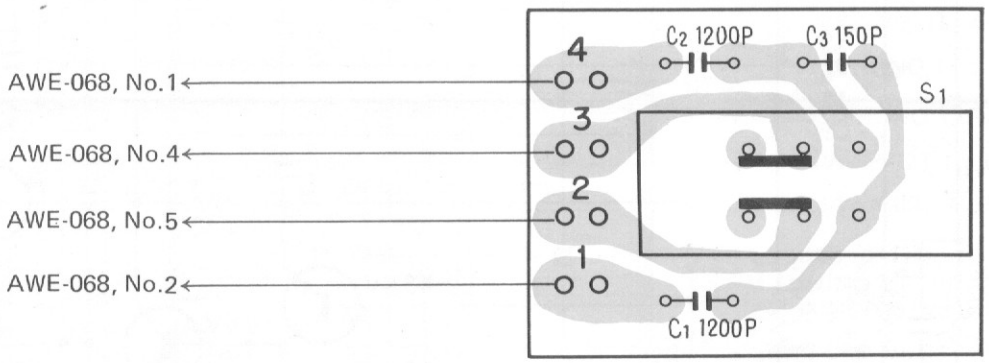

Parts List of De-emphasis Switch Assembly (AWX-099)

SWITCH

Symbol	Description	Part No.
S1	Slide switch (DE-EMPHASIS)	ASH-015-0

CAPACITORS

Symbol	Description			Part No.
C1	Mylar	1200p	50V	CQMA 122J 50
C2	Mylar	1200p	50V	CQMA 122J 50
C3	Ceramic	150p	50V	CCDSL 151K 50

12.7 EQUALIZER AMPLIFIER ASSEMBLY (AWF-021)

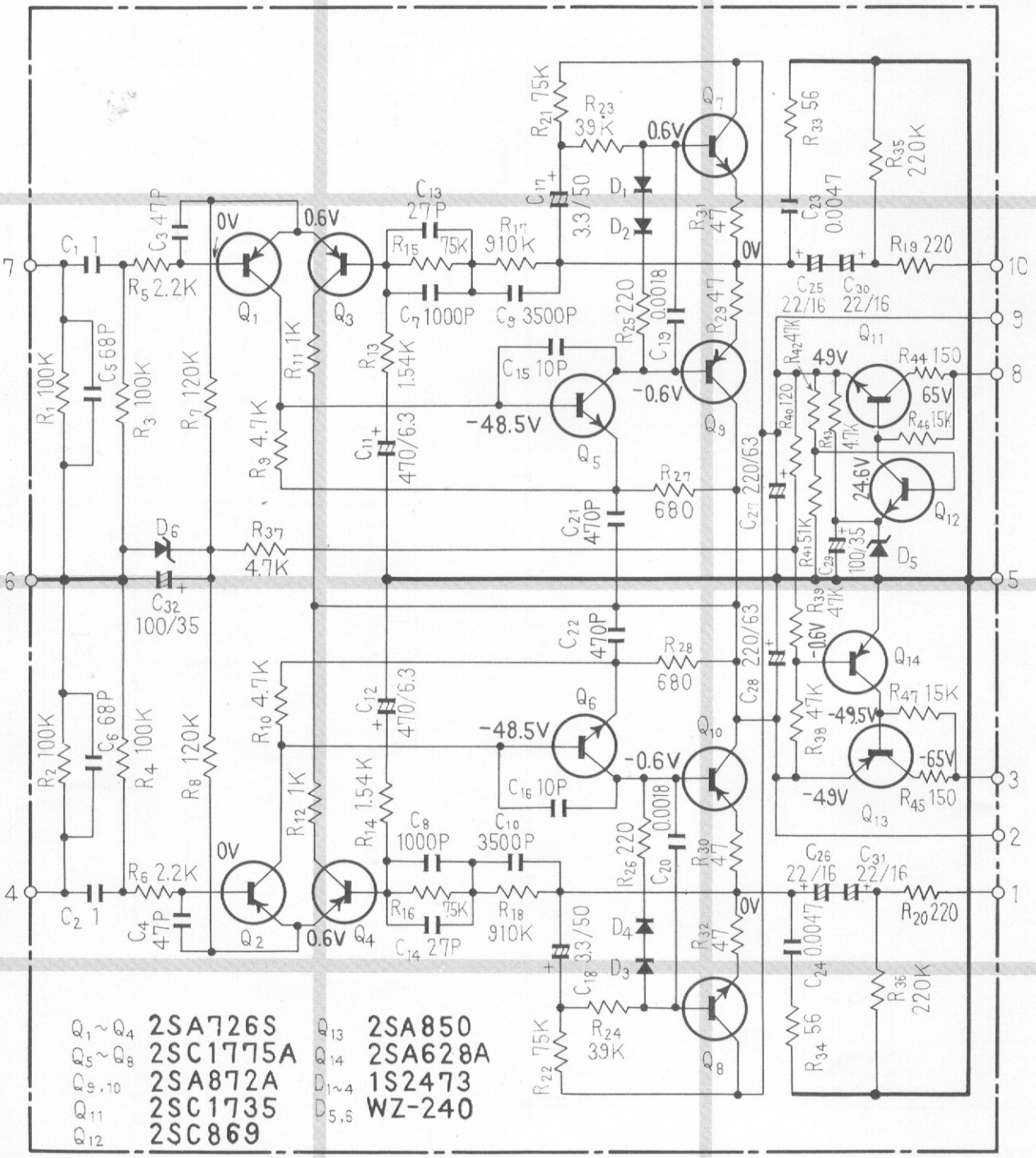

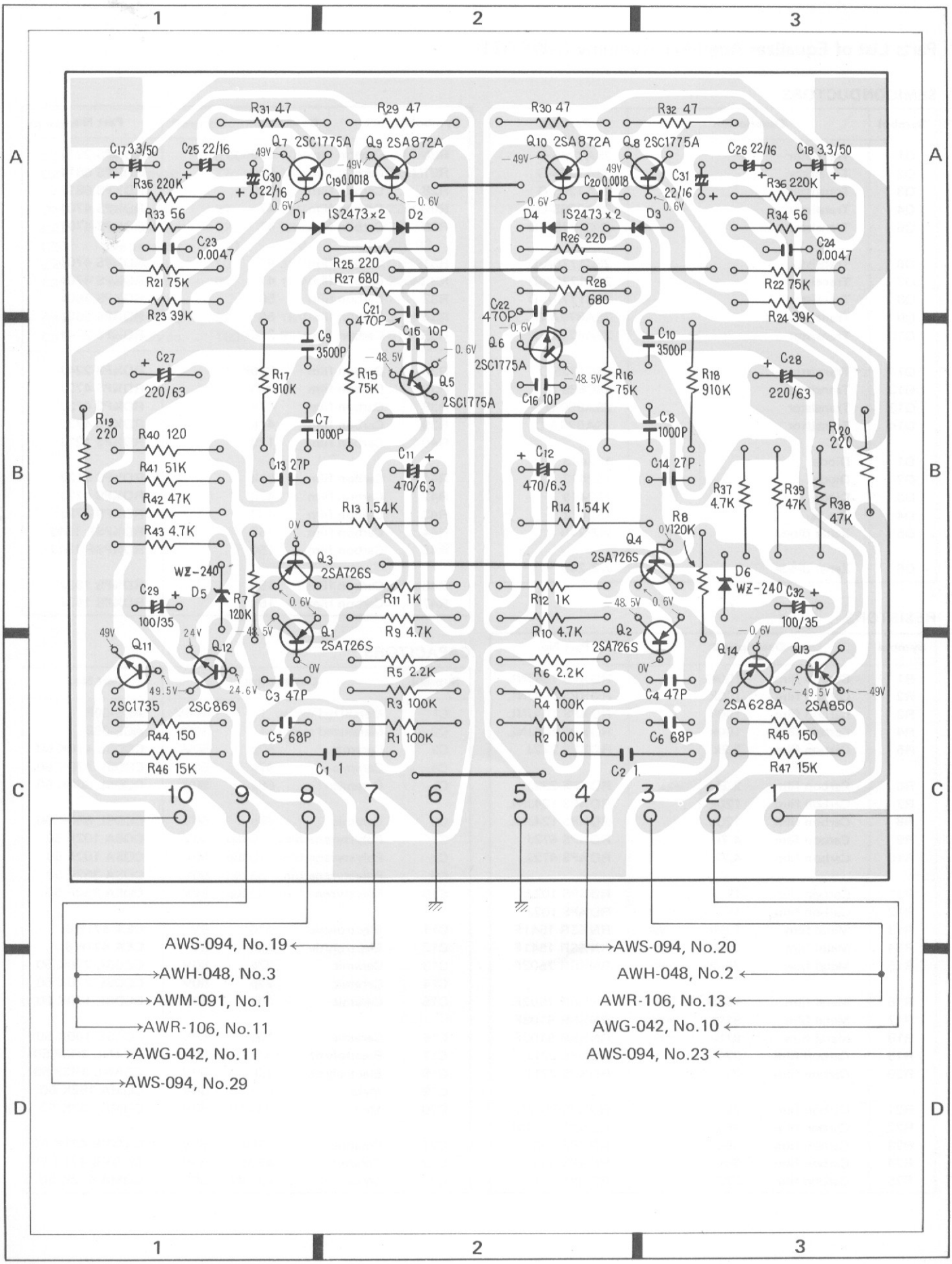
1
2
3
A
B
C
D
R31 47
R29 47
R30 47
R32 47
C17 3.3/50
C25 22/16
Q7 2SC1775A
Q9 2SA872A
Q10 2SA872A
Q8 2SC1775A
C26 22/16
C18 3.3/50
R36 220K
C30 22/16
C19 0.0018
C20 0.0018
C31 22/16
R33 56
D1 IS2473 x 2 D2
D4 IS2473 x 2 D3
R34 56
C23 0.0047
R26 220
C24 0.0047
R25 220
R27 680
R28 680
R21 75K
R22 75K
R23 39K
R24 39K
C21 470P
C22 470P
C9 3500P
C15 10P
Q6 2SC1775A
C10 3500P
C27 220/63
Q5 2SC1775A
C28 220/63
R17 910K
R15 75K
C16 10P
R16 75K
R18 910K
R19 220
R40 120
C7 1000P
C8 1000P
R20 220
R41 51K
C13 27P
C11 470/6.3
C12 470/6.3
C14 27P
R37 4.7K
R39 47K
R38 47K
R42 47K
R43 4.7K
R13 1.54K
R14 1.54K
R8 120K
Q3 2SA726S
Q4 2SA726S
WZ-240
D5
C29 100/35
R7 120K
R11 1K
R12 1K
D6 WZ-240
C32 100/35
Q1 2SA726S
Q2 2SA726S
R9 4.7K
R10 4.7K
Q11 2SC1735
Q12 2SC869
R5 2.2K
R6 2.2K
Q14 2SA628A
Q13 2SA850
R3 100K
R4 100K
C3 47P
C4 47P
C5 68P
R1 100K
R2 100K
C6 68P
R44 150
R45 150
R46 15K
C1 1
C2 1
R47 15K
10
9
8
7
6
5
4
3
2
1
AWS-094, No.19
AWH-048, No.3
AWM-091, No.1
AWR-106, No.11
AWG-042, No.11
AWS-094, No.29
AWS-094, No.20
AWH-048, No.2
AWR-106, No.13
AWG-042, No.10
AWS-094, No.23

Parts List of Equalizer Amplifier Assembly (AWF-021)

SEMICONDUCTORS

Symbol	Description	Part No.
Q1	Transistor	2SA726S-G
Q2	Transistor	2SA726S-G
Q3	Transistor	2SA726S-G
Q4	Transistor	2SA726S-G
Q5	Transistor	2SC1775A-D
Q6	Transistor	2SC1775A-D
Q7	Transistor	2SC1775A-D
Q8	Transistor	2SC1775A-D
Q9	Transistor	2SA872A-D
Q10	Transistor	2SA872A-D
Q11	Transistor	2SC1735-D
Q12	Transistor	2SC869-C
Q13	Transistor	2SA850-D
Q14	Transistor	2SA628A-C
D1	Diode	1S2473
D2	Diode	1S2473
D3	Diode	1S2473
D4	Diode	1S2473
D5	Zener diode	WZ-240
D6	Zener diode	WZ-240

RESISTORS

Symbol	Description			Part No.
R1	Carbon film	100k		RD¼PS 104JNL
R2	Carbon film	100k		RD¼PS 104JNL
R3	Carbon film	100k		RD¼PS 104JNL
R4	Carbon film	100k		RD¼PS 104JNL
R5	Carbon film	2.2k		RD¼PS 222J
R6	Carbon film	2.2k		RD¼PS 222J
R7	Carbon film	120k		RD¼PS 124JNL
R8	Carbon film	120k		RD¼PS 124JNL
R9	Carbon film	4.7k		RD¼PS 472J
R10	Carbon film	4.7k		RD¼PS 472J
R11	Carbon film	1k		RD¼PS 102J
R12	Carbon film	1k		RD¼PS 102J
R13	Metal film	1.54k	½W	RN½SR 1541F
R14	Metal film	1.54k	½W	RN½SR 1541F
R15	Metal film	75.0k	½W	RN½SR 7502F
R16	Metal film	75.0k	½W	RN½SR 7502F
R17	Metal film	910k	½W	RN½SR 9103F
R18	Metal film	910k	½W	RN½SR 9103F
R19	Carbon film	220		RD¼PS 221J
R20	Carbon film	220		RD¼PS 221J
R21	Carbon film	75k		RD¼PS 753JNL
R22	Carbon film	75k		RD¼PS 753JNL
R23	Carbon film	39k		RD¼PS 393J
R24	Carbon film	39k		RD¼PS 393J
R25	Carbon film	220		RD¼PS 221J
R26	Carbon film	220		RD¼PS 221J
R27	Carbon film	680		RD¼PS 681J
R28	Carbon film	680		RD¼PS 681J
R29	Carbon film	47		RD¼PS 470J
R30	Carbon film	47		RD¼PS 470J
R31	Carbon film	47		RD¼PS 470J
R32	Carbon film	47		RD¼PS 470J
R33	Carbon film	56		RD¼PS 560J
R34	Carbon film	56		RD¼PS 560J
R35	Carbon film	220k		RD¼PS 224J
R36	Carbon film	220k		RD¼PS 224J
R37	Carbon film	4.7k		RD¼PS 472J
R38	Carbon film	47k		RD¼PS 473J
R39	Carbon film	47k		RD¼PS 473J
R40	Carbon film	120		RD¼PS 121J
R41	Carbon film	51k		RD¼PS 513J
R42	Carbon film	47k		RD¼PS 473J
R43	Carbon film	4.7k		RD¼PS 472J
R44	Carbon film	150		RD¼PSF 151J
R45	Carbon film	150		RD¼PSF 151J
R46	Carbon film	15k		RD¼PS 153J
R47	Carbon film	15k		RD¼PS 153J

CAPACITORS

Symbol	Description			Part No.
C1	Metallized mylar	1	100V	ACE-008
C2	Metallized mylar	1	100V	ACE-008
C3	Ceramic	47p	50V	CCDSL 470K 50
C4	Ceramic	47p	50V	CCDSL 470K 50
C5	Ceramic	68p	50V	CCDSL 680K 50
C6	Ceramic	68p	50V	CCDSL 680K 50
C7	Polystyrene film	1000p	50V	CQSA 102F 50
C8	Polystyrene film	1000p	50V	CQSA 102F 50
C9	Polystyrene film	3500p	50V	CQSA 352F 50
C10	Polystyrene film	3500p	50V	CQSA 352F 50
C11	Electrolytic	470	6V	CEA 471P 6
C12	Electrolytic	470	6V	CEA 471P 6
C13	Ceramic	27p	50V	CCDSL 270K 50
C14	Ceramic	27p	50V	CCDSL 270K 50
C15	Ceramic	10p	50V	CCDSL 100K 50
C16	Ceramic	10p	50V	CCDSL 100K 50
C17	Electrolytic	3.3	50V	CEANL 3R3P 50
C18	Electrolytic	3.3	50V	CEANL 3R3P 50
C19	Mylar	0.0018	50V	CQMA 182K 50
C20	Mylar	0.0018	50V	CQMA 182K 50
C21	Ceramic	470p	50V	CKDYB 471K 50
C22	Ceramic	470p	50V	CKDYB 471K 50
C23	Mylar	0.0047	50V	CQMA 472K 50

Symbol	Description			Part No.
C24	Mylar	0.0047	50V	CQMA 472K 50
C25	Electrolytic	22	16V	CSZA 220M 16
C26	Electrolytic	22	16V	CSZA 220M 16
C27	Electrolytic	220	63V	CEA 221P 63
C28	Electrolytic	220	63V	CEA 221P 63
C29	Electrolytic	100	35V	CEA 101P 35
C30	Electrolytic	22	16V	CSZA 220M 16
C31	Electrolytic	22	16V	CSZA 220M 16
C32	Electrolytic	100	35V	CEA 101P 35

12.8 FUNCTION SWITCH ASSEMBLY (AWS-094)

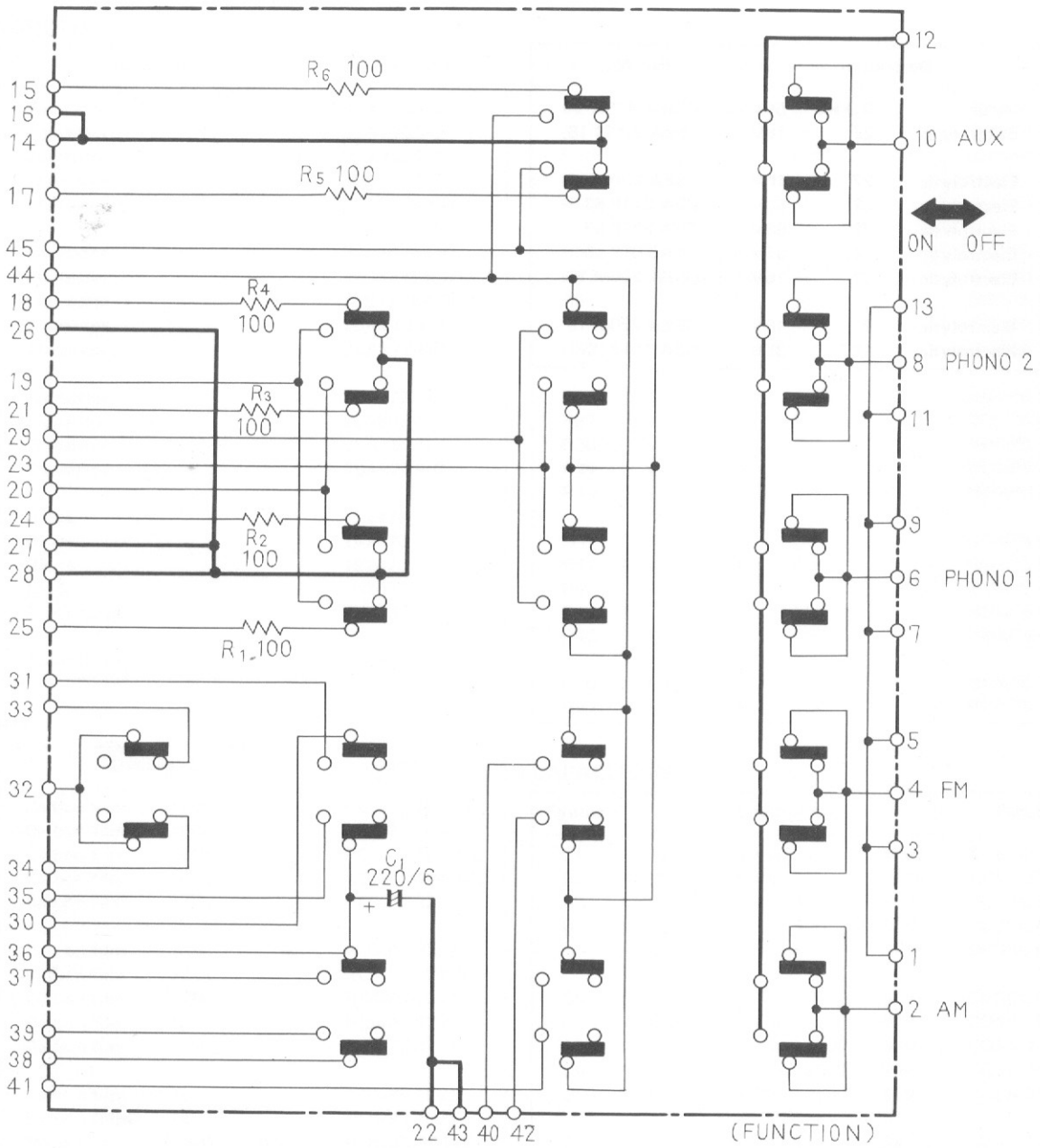

Parts List of Function Switch Assembly (AWS-094)

Symbol	Description	Part No.
S1	Push switch (FUNCTION)	ASG-095
R1	Carbon film resistor 100	RD¼PS 101J
R2	Carbon film resistor 100	RD¼PS 101J
R3	Carbon film resistor 100	RD¼PS 101J
R4	Carbon film resistor 100	RD¼PS 101J
R5	Carbon film resistor 100	RD¼PS 101J
R6	Carbon film resistor 100	RD¼PS 101J
C1	Electrolytic capacitor 220 6V	CEA 221P 6

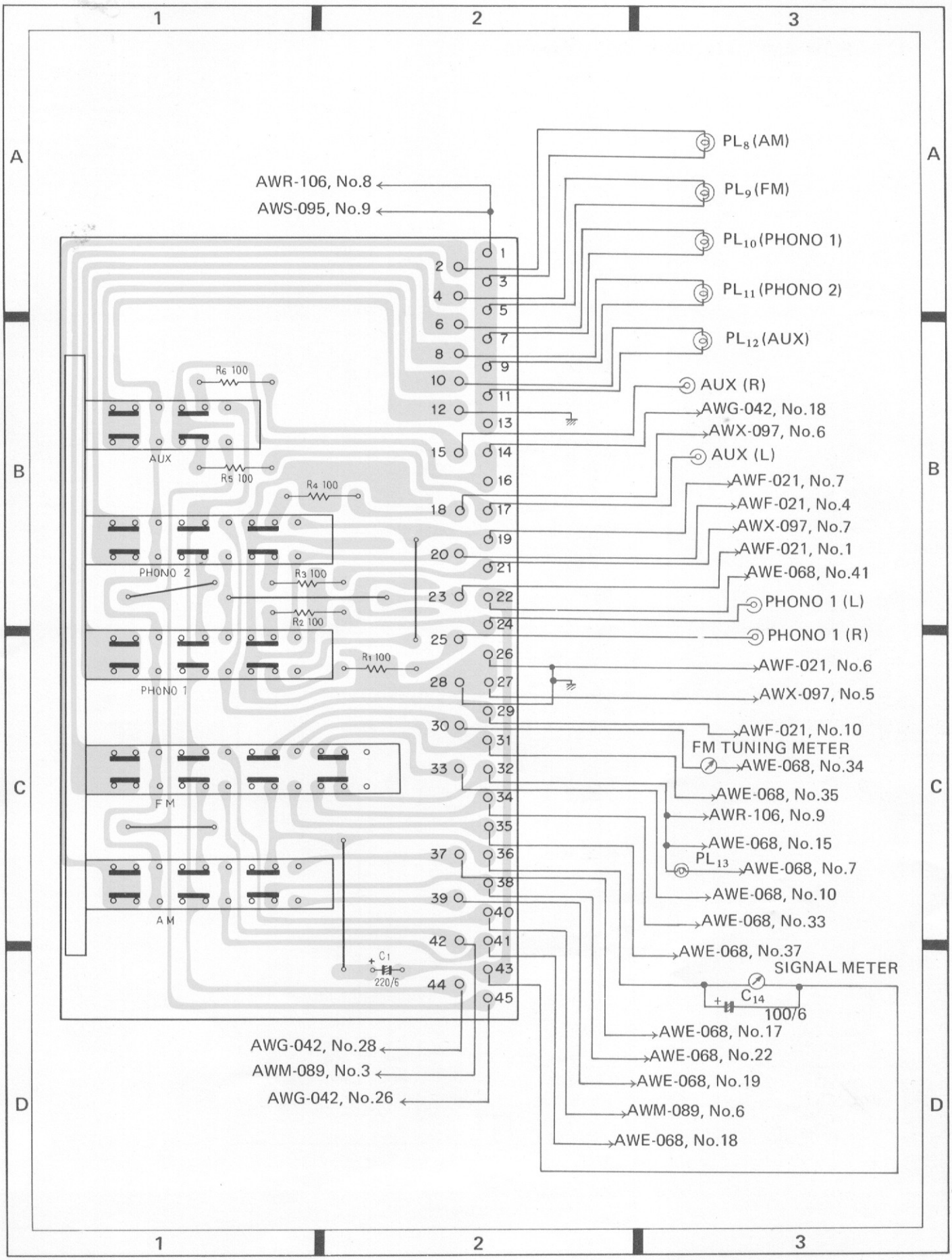
1
2
3
A
B
C
D
AWR-106, No.8
AWS-095, No.9
PL8 (AM)
PL9 (FM)
PL10 (PHONO 1)
PL11 (PHONO 2)
PL12 (AUX)
AUX (R)
AUX (L)
AWG-042, No.18
AWX-097, No.6
AWF-021, No.7
AWF-021, No.4
AWX-097, No.7
AWF-021, No.1
AWE-068, No.41
PHONO 1 (L)
PHONO 1 (R)
AWF-021, No.6
AWX-097, No.5
AWF-021, No.10
FM TUNING METER
AWE-068, No.34
AWE-068, No.35
AWR-106, No.9
AWE-068, No.15
PL13
AWE-068, No.7
AWE-068, No.10
AWE-068, No.33
AWE-068, No.37
SIGNAL METER
C14
100/6
AWE-068, No.17
AWE-068, No.22
AWE-068, No.19
AWM-089, No.6
AWE-068, No.18
AWG-042, No.28
AWM-089, No.3
AWG-042, No.26
R6 100
R5 100
R4 100
R3 100
R2 100
R1 100
C1
220/6
AUX
PHONO 2
PHONO 1
FM
AM

12.9 FLAT AMPLIFIER ASSEMBLY (AWG-042)

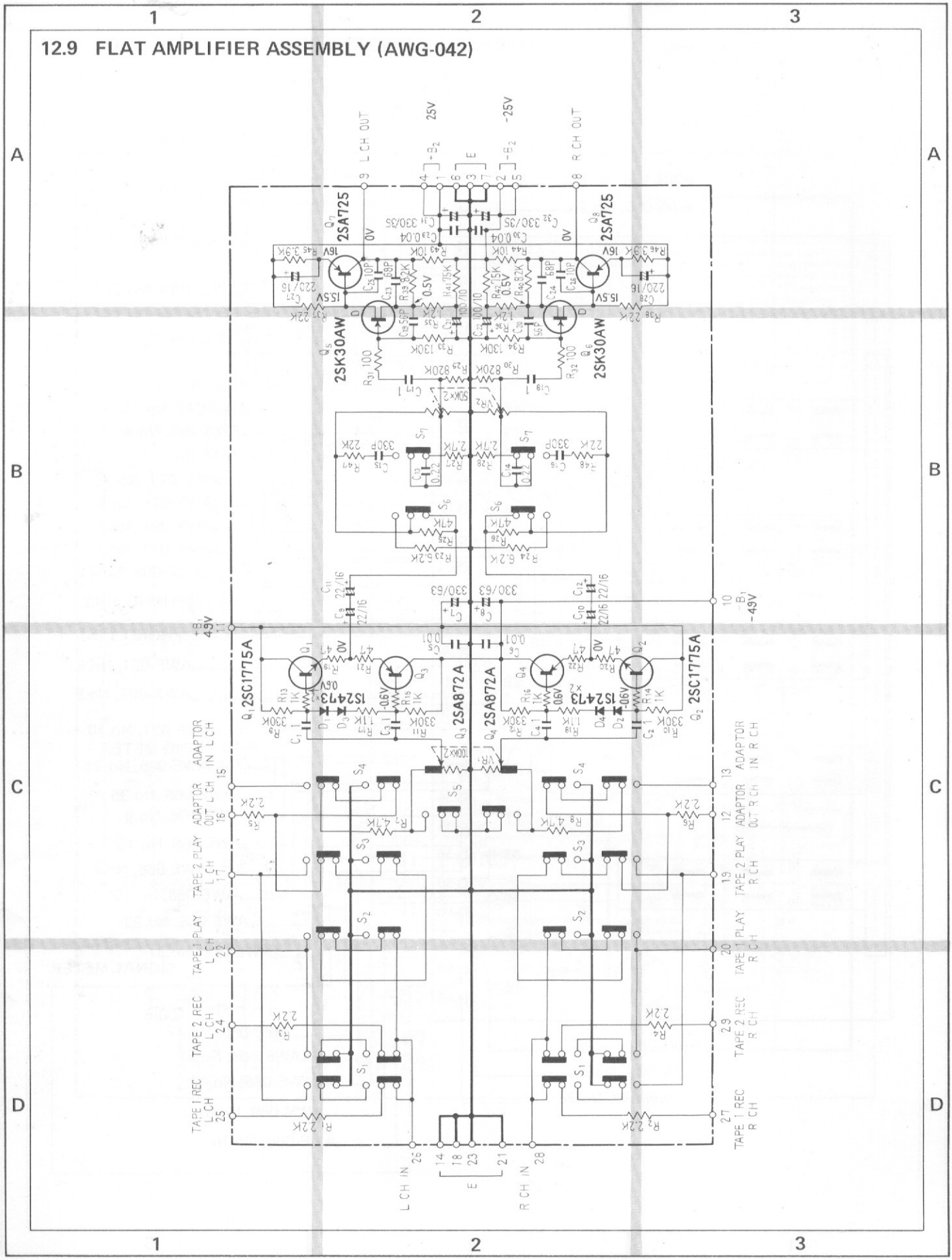

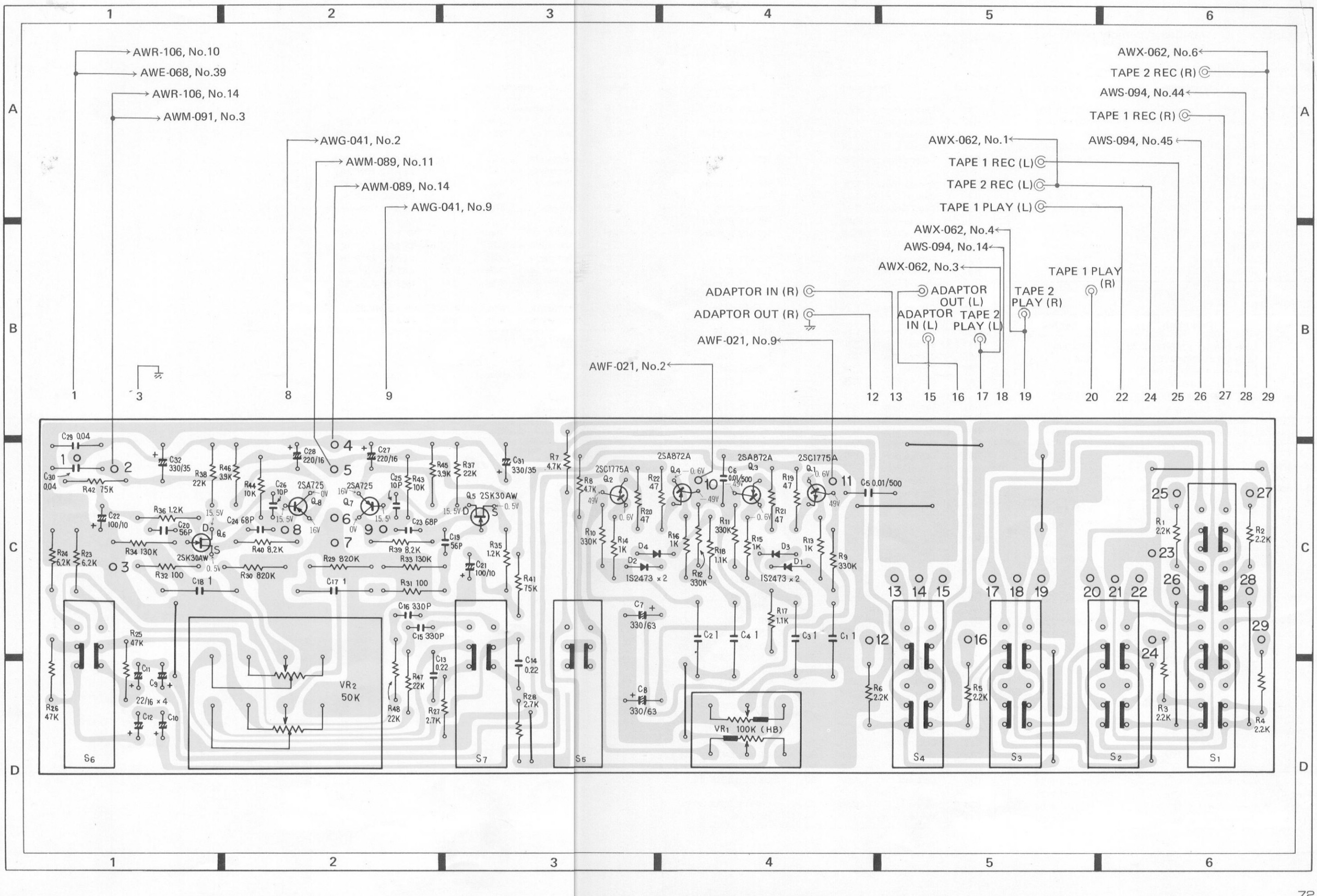
AWR-106, No.10
AWE-068, No.39
AWR-106, No.14
AWM-091, No.3
AWG-041, No.2
AWM-089, No.11
AWM-089, No.14
AWG-041, No.9
AWX-062, No.6
TAPE 2 REC (R)
AWS-094, No.44
TAPE 1 REC (R)
AWS-094, No.45
AWX-062, No.1
TAPE 1 REC (L)
TAPE 2 REC (L)
TAPE 1 PLAY (L)
AWX-062, No.4
AWS-094, No.14
AWX-062, No.3
TAPE 1 PLAY (R)
ADAPTOR IN (R)
ADAPTOR OUT (L)
TAPE 2 PLAY (R)
ADAPTOR OUT (R)
ADAPTOR IN (L)
TAPE 2 PLAY (L)
AWF-021, No.9
AWF-021, No.2
1 3 8 9 12 13 15 16 17 18 19 20 22 24 25 26 27 28 29
C29 0.04
C30 0.04
R42 75K
C32 330/35
R38 22K
R46 3.9K
R44 10K
C28 220/16
C27 220/16
C26 10P
C25 10P
R43 10K
R45 3.9K
R37 22K
C31 330/35
2SA725
2SA725
Q5 2SK30AW
C22 100/10
R36 1.2K
C20 56P
C24 68P
C23 68P
R34 130K
2SK30AW
R40 8.2K
R39 8.2K
C19 56P
R24 6.2K
R23 6.2K
R32 100
R30 820K
R29 820K
R33 130K
C18 1
C17 1
R31 100
C21 100/10
R35 1.2K
R41 75K
R7 4.7K
R8 4.7K
2SC1775A
2SA872A
2SA872A
2SC1775A
R22 47
R19 47
C6 0.01/500
C5 0.01/500
R10 330K
R14 1K
R20 47
R21 47
R11 330K
R15 1K
R13 1K
R9 330K
R16 1K
R18 1.1K
R12 330K
D4
D3
D2
D1
1S2473 × 2
1S2473 × 2
C16 330P
C15 330P
C7 330/63
C8 330/63
C2 1
C4 1
C3 1
C1 1
R17 1.1K
R25 47K
C11
C9
22/16 × 4
C12
C10
R26 47K
R47 22K
C13 0.22
R27 2.7K
R48 22K
C14 0.22
R28 2.7K
VR2 50K
VR1 100K (HB)
R6 2.2K
R5 2.2K
R3 2.2K
R1 2.2K
R2 2.2K
R4 2.2K
S6
S7
S5
S4
S3
S2
S1

Parts List of Flat Amplifier Assembly (AWG-042)

SEMICONDUCTORS

Symbol	Description	Part No.
Q1	Transistor	2SC1775A-E
Q2	Transistor	2SC1775A-E
Q3	Transistor	2SA872A-E
Q4	Transistor	2SA872A-E
Q5	FET	2SK30AW-Y
Q6	FET	2SK30AW-Y
Q7	Transistor	2SA725-G
Q8	Transistor	2SA725-G
D1	Diode	1S2473
D2	Diode	1S2473
D3	Diode	1S2473
D4	Diode	1S2473

SWITCHES

Symbol	Description	Part No.
S1	Lever switch (DUPLICATE)	ASK-084
S2	Lever switch (MONITOR 1)	ASK-092
S3	Lever switch (MONITOR 2)	ASK-092
S4	Lever switch (ADAPTOR)	ASK-092
S5	Lever switch (MODE)	ASK-090
S6	Lever switch (MUTING)	ASK-090
S7	Lever switch (LOUDNESS)	ASK-090

RESISTORS

Symbol	Description		Part No.
VR1	Variable (100k-HB BALANCE)		ACV-163
VR2	Variable (50k-B2 VOLUME)		ACV-169
R1	Carbon film	2.2k	RD¼PS 222J
R2	Carbon film	2.2k	RD¼PS 222J
R3	Carbon film	2.2k	RD¼PS 222J
R4	Carbon film	2.2k	RD¼PS 222J
R5	Carbon film	2.2k	RD¼PS 222J
R6	Carbon film	2.2k	RD¼PS 222J
R7	Carbon film	4.7k	RD¼PS 472J
R8	Carbon film	4.7k	RD¼PS 472J
R9	Carbon film	330k	RD¼PS 334JNL
R10	Carbon film	330k	RD¼PS 334JNL
R11	Carbon film	330k	RD¼PS 334JNL
R12	Carbon film	330k	RD¼PS 334JNL
R13	Carbon film	1k	RD¼PS 102J
R14	Carbon film	1k	RD¼PS 102J
R15	Carbon film	1k	RD¼PS 102J
R16	Carbon film	1k	RD¼PS 102J
R17	Carbon film	1.1k	RD¼PS 112J
R18	Carbon film	1.1k	RD¼PS 112J
R19	Carbon film	47	RD¼PS 470J
R20	Carbon film	47	RD¼PS 470J
R21	Carbon film	47	RD¼PS 470J
R22	Carbon film	47	RD¼PS 470J
R23	Carbon film	6.2k	RD¼PS 622J
R24	Carbon film	6.2k	RD¼PS 622J
R25	Carbon film	47k	RD¼PS 473JNL
R26	Carbon film	47k	RD¼PS 473JNL
R27	Carbon film	2.7k	RD¼PS 272J
R28	Carbon film	2.7k	RD¼PS 272J
R29	Carbon film	820k	RD¼PS 824JNL
R30	Carbon film	820k	RD¼PS 824JNL
R31	Carbon film	100	RD¼PS 101J
R32	Carbon film	100	RD¼PS 101J
R33	Carbon film	130k	RD¼PS 134JNL
R34	Carbon film	130k	RD¼PS 134JNL
R35	Carbon film	1.2k	RD¼PS 122J
R36	Carbon film	1.2k	RD¼PS 122J
R37	Carbon film	22k	RD¼PS 223J
R38	Carbon film	22k	RD¼PS 223J
R39	Carbon film	8.2k	RD¼PS 822J
R40	Carbon film	8.2k	RD¼PS 822J
R41	Carbon film	75k	RD¼PS 753JNL
R42	Carbon film	75k	RD¼PS 753JNL
R43	Carbon film	10k	RD¼PS 103J
R44	Carbon film	10k	RD¼PS 103J
R45	Carbon film	3.9k	RD¼PS 392J
R46	Carbon film	3.9k	RD¼PS 392J
R47	Carbon film	22k	RD¼PS 223J
R48	Carbon film	22k	RD¼PS 223J

CAPACITORS

Symbol	Description			Part No.
C1	Metallized mylar	1	100V	ACE-008
C2	Metallized mylar	1	100V	ACE-008
C3	Metallized mylar	1	100V	ACE-008
C4	Metallized mylar	1	100V	ACE-008
C5	Ceramic	0.01	500V	CKDYF 103Z 500
C6	Ceramic	0.01	500V	CKDYF 103Z 500
C7	Electrolytic	330	63V	CEA 331P 63
C8	Electrolytic	330	63V	CEA 331P 63
C9	Electrolytic	22	16V	CSZA 220M 16
C10	Electrolytic	22	16V	CSZA 220M 16
C11	Electrolytic	22	16V	CSZA 220M 16
C12	Electrolytic	22	16V	CSZA 220M 16
C13	Mylar	0.22	50V	CQMA 224J 50
C14	Mylar	0.22	50V	CQMA 224J 50
C15	Ceramic	330R	50V	CKDYB 331K 50
C16	Ceramic	330p	50V	CKDYB 331K 50
C17	Metallized mylar	1	100V	ACE-008

Symbol	Description			Part No.
C18	Metallized mylar	1	100V	ACE-008
C19	Ceramic	56p	50V	CCDSL 560K 50
C20	Ceramic	56p	50V	CCDSL 560K 50
C21	Electrolytic	100	10V	CEANL 101P 10
C22	Electrolytic	100	10V	CEANL 101P 10
C23	Ceramic	68p	50V	CCDSL 680K 50
C24	Ceramic	68p	50V	CCDSL 680K 50
C25	Ceramic	10p	50V	CCDSL 100F 50
C26	Ceramic	10p	50V	CCDSL 100F 50
C27	Electrolytic	220	16V	CEANL 221P 16
C28	Electrolytic	220	16V	CEANL 221P 16
C29	Ceramic	0.04	50V	CKDYF 403Z 50
C30	Ceramic	0.04	50V	CKDYF 403Z 50
C31	Electrolytic	330	35V	CEA 331P 35
C32	Electrolytic	330	35V	CEA 331P 35

OTHERS

Symbol	Description	Part No.
	Screw	ABA-116
	Union nut	ABN-021
	Washer faced nut	ABN-024

12.10 5P CONNECTOR ASSEMBLY (AWX-062)

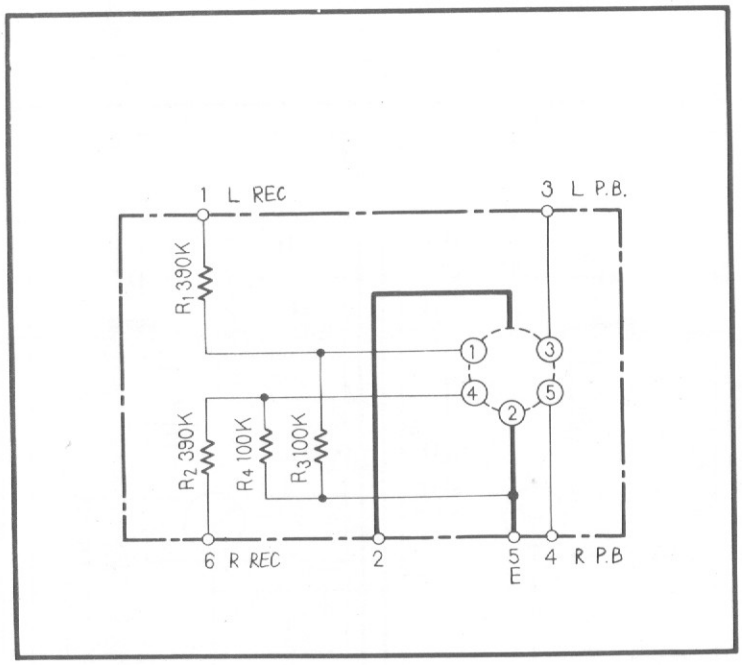

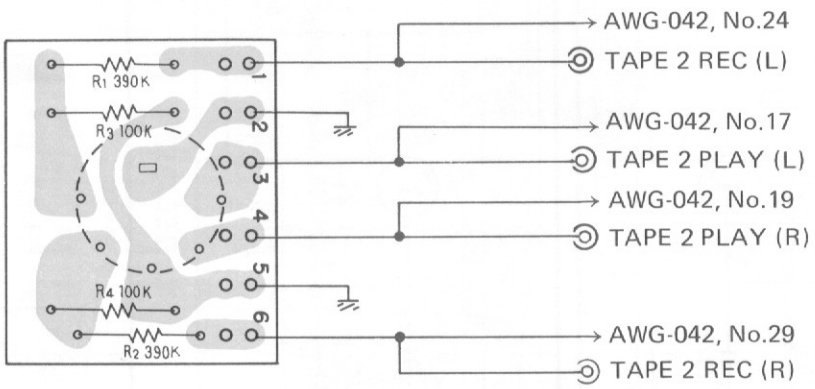

Parts List of 5P Connector Assembly (AWX-062)

Symbol	Description		Part No.
R1	Carbon film resistor	390k	RD¼PS 394J
R2	Carbon film resistor	390k	RD¼PS 394J
R3	Carbon film resistor	100k	RD¼PS 104J
R4	Carbon film resistor	100k	RD¼PS 104J
	Connector socket 5p (REC/PLAY)		AKP-007

12.11 CONTROL AMPLIFIER ASSEMBLY (AWG-041)

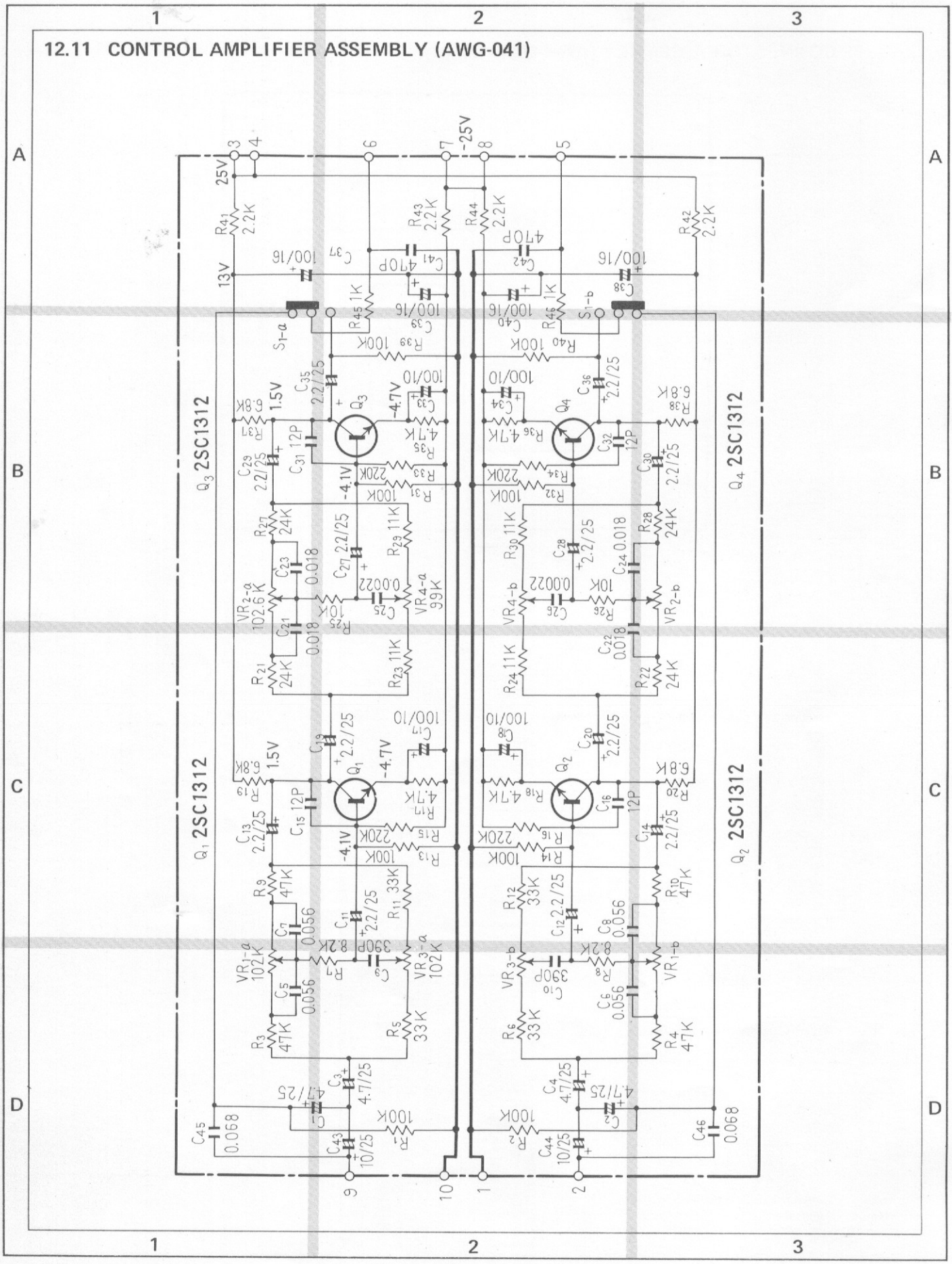

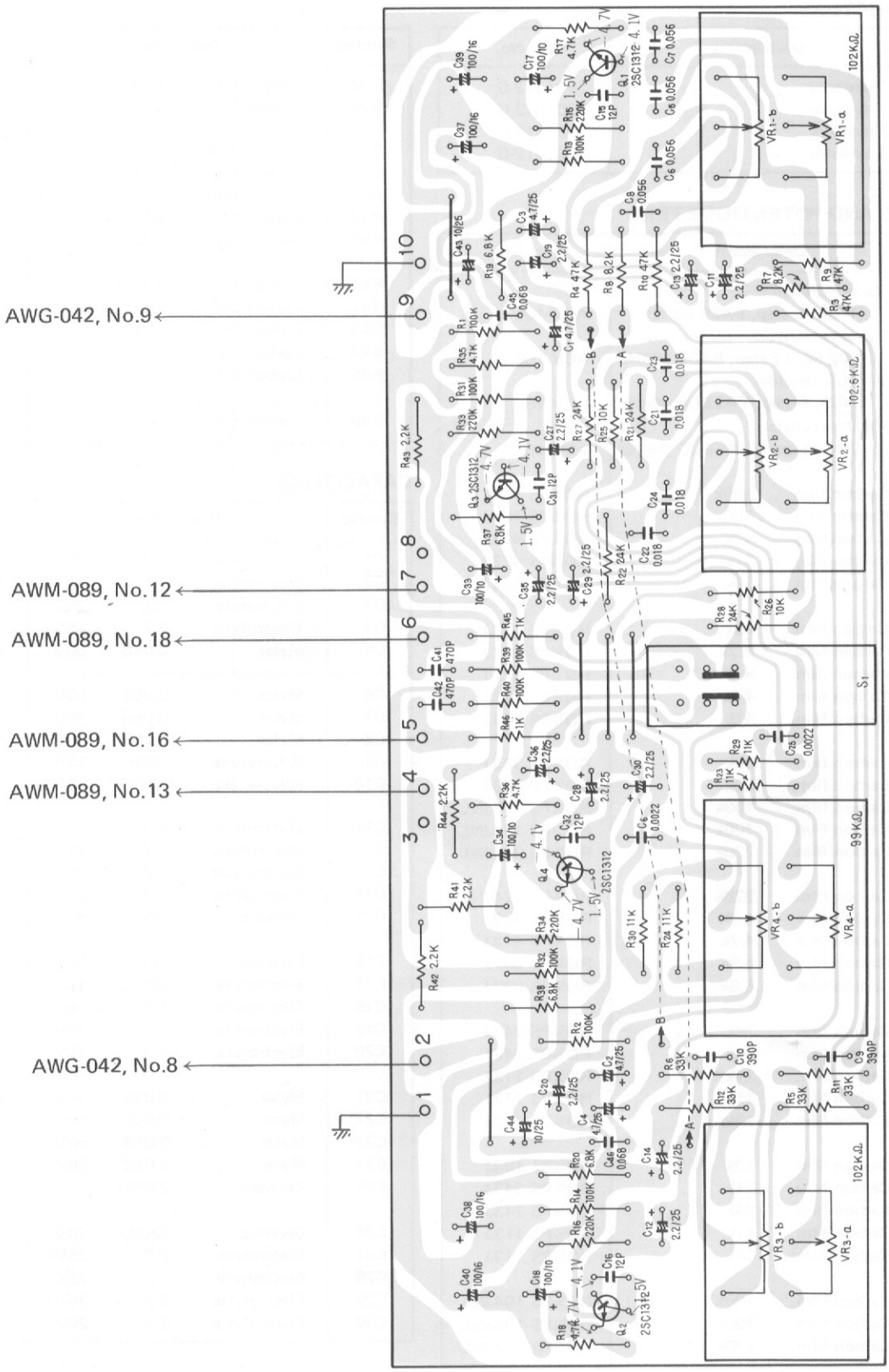
AWG-042, No.9
AWM-089, No.12
AWM-089, No.18
AWM-089, No.16
AWM-089, No.13
AWG-042, No.8
1
2
3
A
B
C
D
VR1-a
VR1-b
VR2-a
VR2-b
VR3-a
VR3-b
VR4-a
VR4-b
S1

Parts List of Control Amplifier Assembly (AWG-041)

SEMICONDUCTORS

Symbol	Description	Part No.
Q1	Transistor	2SC1312-G
Q2	Transistor	2SC1312-G
Q3	Transistor	2SC1312-G
Q4	Transistor	2SC1312-G

RESISTORS AND POTENTIOMETERS

Symbol	Description		Part No.
VR1	Variable resistor (102k, 5-step, BASS 50Hz)		ACV-165
VR2	Variable resistor (102.6k, 11-step, BASS 100Hz)		ACV-166
VR3	Variable resistor (102k, 5-step, TREBLE 20kHz)		ACV-168
VR4	Variable resistor (99k, 11-step, TREBLE 10kHz)		ACV-167
R1	Carbon film	100k	RD¼PS 104J
R2	Carbon film	100k	RD¼PS 104J
R3	Carbon film	47k	RD¼PS 473J
R4	Carbon film	47k	RD¼PS 473J
R5	Carbon film	33k	RD¼PS 333J
R6	Carbon film	33k	RD¼PS 333J
R7	Carbon film	8.2k	RD¼PS 822J
R8	Carbon film	8.2k	RD¼PS 822J
R9	Carbon film	47k	RD¼PS 473J
R10	Carbon film	47k	RD¼PS 473J
R11	Carbon film	33k	RD¼PS 333J
R12	Carbon film	33k	RD¼PS 333J
R13	Carbon film	100k	RD¼PS 104JNL
R14	Carbon film	100k	RD¼PS 104JNL
R15	Carbon film	220k	RD¼PS 224JNL
R16	Carbon film	220k	RD¼PS 224JNL
R17	Carbon film	4.7k	RD¼PS 472J
R18	Carbon film	4.7k	RD¼PS 472J
R19	Carbon film	6.8k	RD¼PS 682J
R20	Carbon film	6.8k	RD¼PS 682J
R21	Carbon film	24k	RD¼PS 243J
R22	Carbon film	24k	RD¼PS 243J
R23	Carbon film	11k	RD¼PS 113J
R24	Carbon film	11k	RD¼PS 113J
R25	Carbon film	10k	RD¼PS 103J
R26	Carbon film	10k	RD¼PS 103J
R27	Carbon film	24k	RD¼PS 243J
R28	Carbon film	24k	RD¼PS 243J
R29	Carbon film	11k	RD¼PS 113J
R30	Carbon film	11k	RD¼PS 113J
R31	Carbon film	100k	RD¼PS 104JNL
R32	Carbon film	100k	RD¼PS 104JNL
R33	Carbon film	220k	RD¼PS 224JNL
R34	Carbon film	220k	RD¼PS 224JNL
R35	Carbon film	4.7k	RD¼PS 472J
R36	Carbon film	4.7k	RD¼PS 472J
R37	Carbon film	6.8k	RD¼PS 682J
R38	Carbon film	6.8k	RD¼PS 682J
R39	Carbon film	100k	RD¼PS 104J
R40	Carbon film	100k	RD¼PS 104J
R41	Carbon film	2.2k	RD¼PS 222J
R42	Carbon film	2.2k	RD¼PS 222J
R43	Carbon film	2.2k	RD¼PS 222J
R44	Carbon film	2.2k	RD¼PS 222J
R45	Carbon film	1k	RD¼PS 102J
R46	Carbon film	1k	RD¼PS 102J

CAPACITORS

Symbol	Description			Part No.
C1	Electrolytic	4.7	25V	CSZA 4R7M 25
C2	Electrolytic	4.7	25V	CSZA 4R7M 25
C3	Electrolytic	4.7	25V	CSZA 4R7M 25
C4	Electrolytic	4.7	25V	CSZA 4R7M 25
C5	Mylar	0.056	50V	CQMA 563J 50
C6	Mylar	0.056	50V	CQMA 563J 50
C7	Mylar	0.056	50V	CQMA 563J 50
C8	Mylar	0.056	50V	CQMA 563J 50
C9	Polystyrene	390p	50V	CQSA 391J 50
C10	Polystyrene	390p	50V	CQSA 391J 50
C11	Electrolytic	2.2	25V	CEANL 2R2P 25
C12	Electrolytic	2.2	25V	CEANL 2R2P 25
C13	Electrolytic	2.2	25V	CEANL 2R2P 25
C14	Electrolytic	2.2	25V	CEANL 2R2P 25
C15	Ceramic	12p	50V	CCDSL 120K 50
C16	Ceramic	12p	50V	CCDSL 120K 50
C17	Electrolytic	100	10V	ACH-312
C18	Electrolytic	100	10V	ACH-312
C19	Electrolytic	2.2	25V	CEANL 2R2P 25
C20	Electrolytic	2.2	25V	CEANL 2R2P 25
C21	Mylar	0.018	50V	CQMA 183J 50
C22	Mylar	0.018	50V	CQMA 183J 50
C23	Mylar	0.018	50V	CQMA 183J 50
C24	Mylar	0.018	50V	CQMA 183J 50
C25	Ceramic	2200p	50V	CKDYA 222J 50
C26	Ceramic	2200p	50V	CKDYA 222J 50
C27	Electrolytic	2.2	25V	CEANL 2R2P 25
C28	Electrolytic	2.2	25V	CEANL 2R2P 25
C29	Electrolytic	2.2	25V	CEANL 2R2P 25
C30	Electrolytic	2.2	25V	CEANL 2R2P 25

Symbol	Description			Part No.
C31	Ceramic	12p	50V	CCDSL 120K 50
C32	Ceramic	12p	50V	CCDSL 120K 50
C33	Electrolytic	100	10V	ACH-312
C34	Electrolytic	100	10V	ACH-312
C35	Electrolytic	2.2	25V	CEANL 2R2P 25
C36	Electrolytic	2.2	25V	CEANL 2R2P 25
C37	Electrolytic	100	16V	ACH-311
C38	Electrolytic	100	16V	ACH-311
C39	Electrolytic	100	16V	ACH-311
C40	Electrolytic	100	16V	ACH-311
C41	Ceramic	470p	50V	CKDYB 471K 50
C42	Ceramic	470p	50V	CKDYB 471K 50
C43	Electrolytic	10	25V	CSZA 100M 25
C44	Electrolytic	10	25V	CSZA 100M 25
C45	Mylar	0.068	50V	CQMA 683J 50
C46	Mylar	0.068	50V	CQMA 683J 50

OTHERS

Symbol	Description	Part No.
	Lever switch (TONE)	ASK-090
	Washer faced nut	ABN-024

12.12 FILTER AMPLIFIER ASSEMBLY (AWM-089)

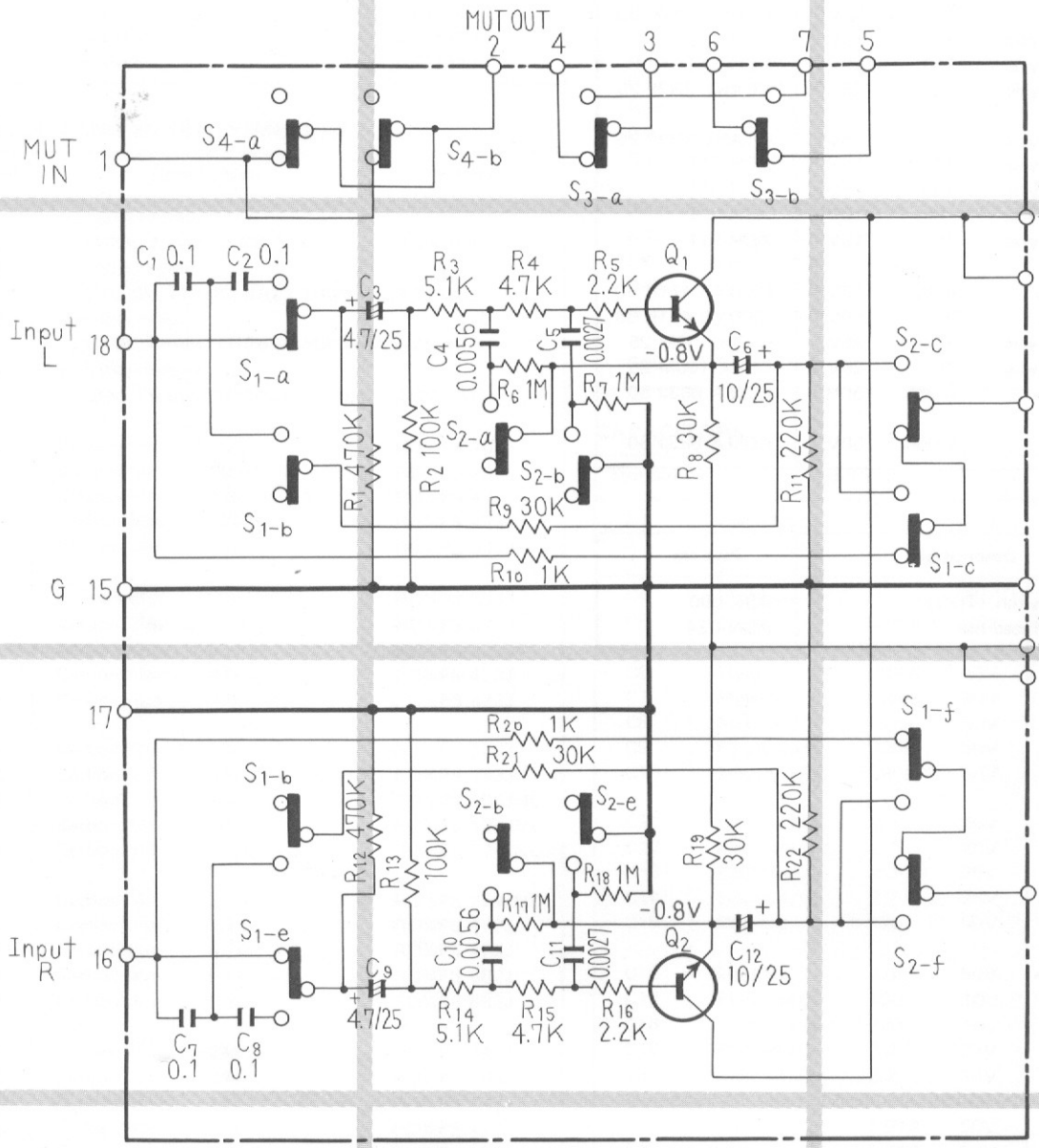

SWITCHS

S_1 ; LOW FILTER
S_2 ; HIGH FILTER
S_3 ; MULTIPATH
S_4 ; FM MUTING

TRANSISTORS

Q_1, Q_2 **2SC1313**×2
(2SC1345)

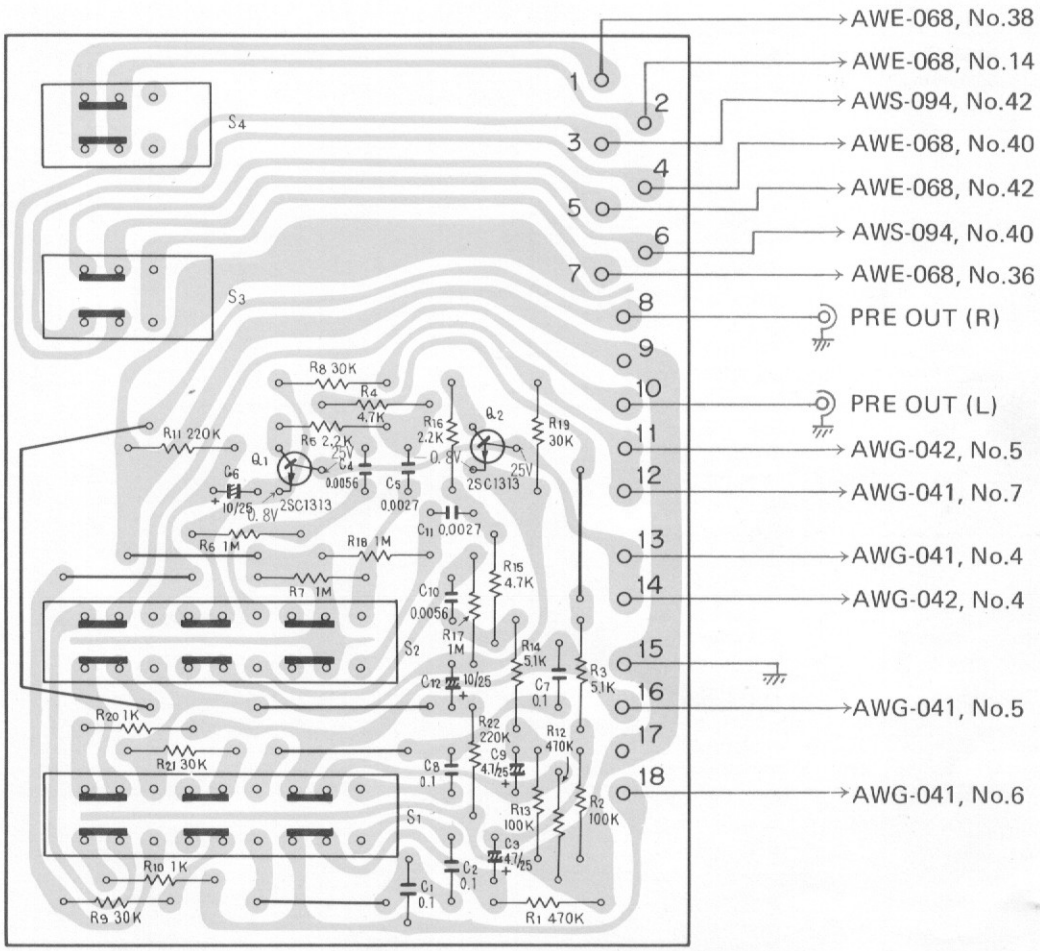
1
2
3
4
5
6
7
8
9
10
11
12
13
14
15
16
17
18
AWE-068, No.38
AWE-068, No.14
AWS-094, No.42
AWE-068, No.40
AWE-068, No.42
AWS-094, No.40
AWE-068, No.36
PRE OUT (R)
PRE OUT (L)
AWG-042, No.5
AWG-041, No.7
AWG-041, No.4
AWG-042, No.4
AWG-041, No.5
AWG-041, No.6
S4
S3
S2
S1
R8 30K
R4 4.7K
R5 2.2K
R11 220K
Q1
2SC1313
C6 10/25
C4 0.0056
C5 0.0027
R16 2.2K
Q2
2SC1313
R19 30K
C11 0.0027
R6 1M
R18 1M
R7 1M
C10 0.0056
R17 1M
R15 4.7K
C12 10/25
R14 5.1K
C7 0.1
R3 5.1K
R20 1K
R21 30K
R22 220K
C8 0.1
C9 4.7/25
R12 470K
R13 100K
R2 100K
C3 4.7/25
C2 0.1
C1 0.1
R10 1K
R9 30K
R1 470K

Parts List of Filter Amplifier Assembly (AWM-089)

SEMICONDUCTORS

Symbol	Description	Part No.
Q1	Transistor	2SC1313-G (2SC1345-D)
Q2	Transistor	2SC1313-G (2SC1345-D)

SWITCHES

Symbol	Description	Part No.
S1-4	Push switch (LOW FILTER, HIGH FILTER, MULTIPATH, FM MUTING)	ASG-098

RESISTORS

Symbol	Description		Part No.
R1	Carbon film	470k	RD¼PS 474J
R2	Carbon film	100k	RD¼PS 104JNL
R3	Carbon film	5.1k	RD¼PS 512J
R4	Carbon film	4.7k	RD¼PS 472J
R5	Carbon film	2.2k	RD¼PS 222J
R6	Carbon film	1M	RD¼PS 105J
R7	Carbon film	1M	RD¼PS 105J
R8	Carbon film	30k	RD¼PS 303J
R9	Carbon film	30k	RD¼PS 303J
R10	Carbon film	1k	RD¼PS 102J
R11	Carbon film	220k	RD¼PS 224J
R12	Carbon film	470k	RD¼PS 474J
R13	Carbon film	100k	RD¼PS 104JNL
R14	Carbon film	5.1k	RD¼PS 512J
R15	Carbon film	4.7k	RD¼PS 472J
R16	Carbon film	2.2k	RD¼PS 222J
R17	Carbon film	1M	RD¼PS 105J
R18	Carbon film	1M	RD¼PS 105J
R19	Carbon film	30k	RD¼PS 303J
R20	Carbon film	1k	RD¼PS 102J
R21	Carbon film	30k	RD¼PS 303J
R22	Carbon film	220k	RD¼PS 224J

CAPACITORS

Symbol	Description			Part No.
C1	Mylar	0.1	50V	CQMA 104J 50
C2	Mylar	0.1	50V	CQMA 104J 50
C3	Electrolytic	4.7	25V	CSZA 4R7M 25
C4	Ceramic	5600p	50V	CKDYA 562J 50
C5	Ceramic	2700p	50V	CKDYA 272J 50
C6	Electrolytic	10	25V	CSZA 100M 25
C7	Mylar	0.1	50V	CQMA 104J 50
C8	Mylar	0.1	50V	CQMA 104J 50
C9	Electrolytic	4.7	25V	CSZA 4R7M 25
C10	Ceramic	5600p	50V	CKDYA 562J 50
C11	Ceramic	2700p	50V	CKDYA 272J 50
C12	Electrolytic	10	25V	CSZA 100M 25

12.13 MICROPHONE JACK ASSEMBLY (AWX-097)

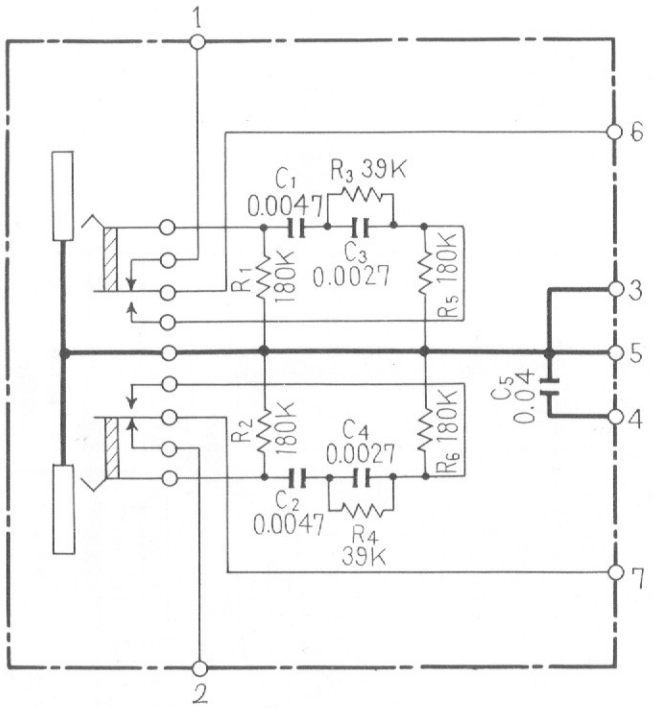

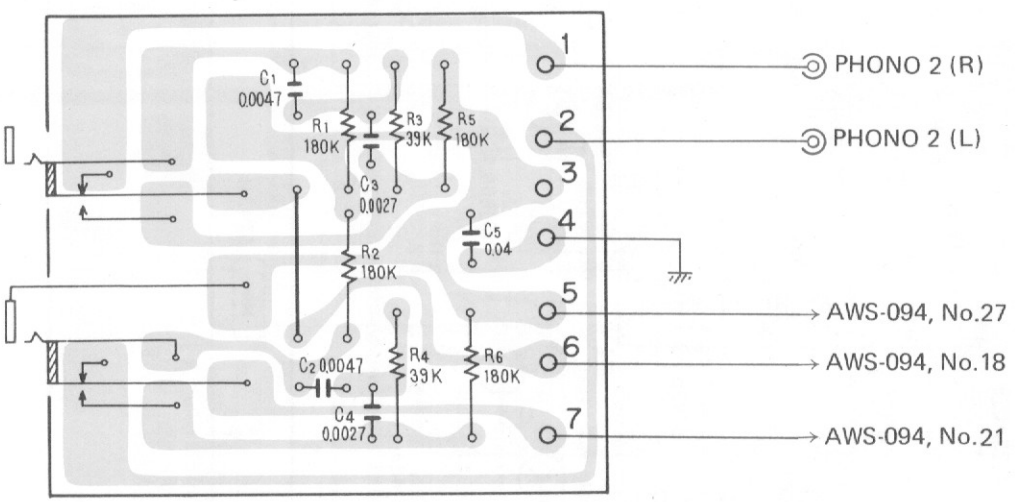

Parts List of Microphone Jack Assembly (AWX-097)

RESISTORS

Symbol	Description		Part No.
R1	Carbon film	180k	RD¼PS 184JNL
R2	Carbon film	180k	RD¼PS 184JNL
R3	Carbon film	39k	RD¼PS 393JNL
R4	Carbon film	39k	RD¼PS 393JNL
R5	Carbon film	180k	RD¼PS 184JNL
R6	Carbon film	180k	RD¼PS 184JNL

CAPACITORS

Symbol	Description			Part No.
C1	Mylar	4700p	50V	CQMA 472J 50
C2	Mylar	4700p	50V	CQMA 472J 50
C3	Mylar	2700p	50V	CQMA 272J 50
C4	Mylar	2700p	50V	CQMA 272J 50
C5	Ceramic	0.04	50V	CKDYF 403Z 50

OTHER

Symbol	Description	Part No.
	Phone jack (MIC)	AKN-013

12.14 POWER AMPLIFIER ASSEMBLY (AWH-048)

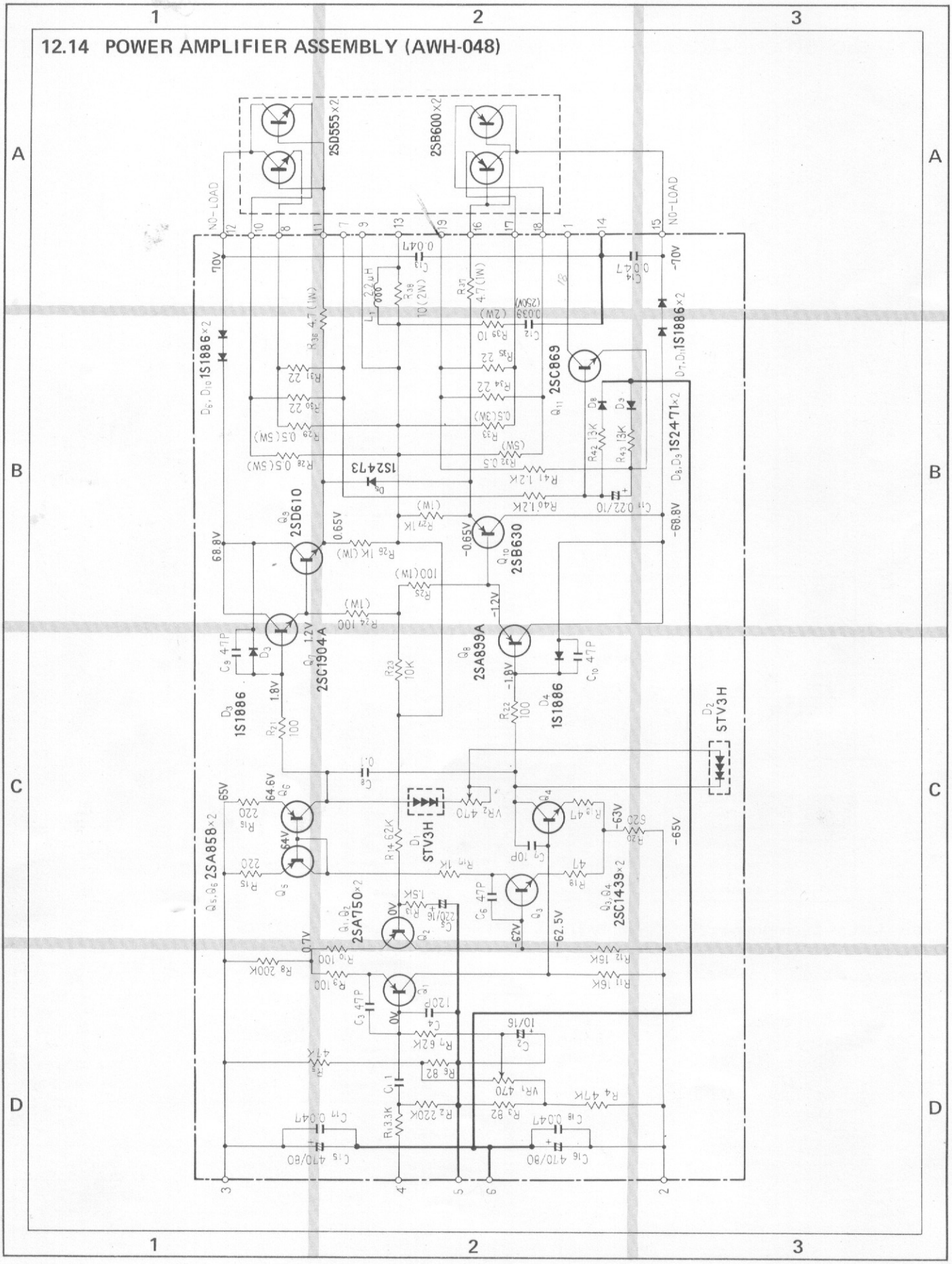

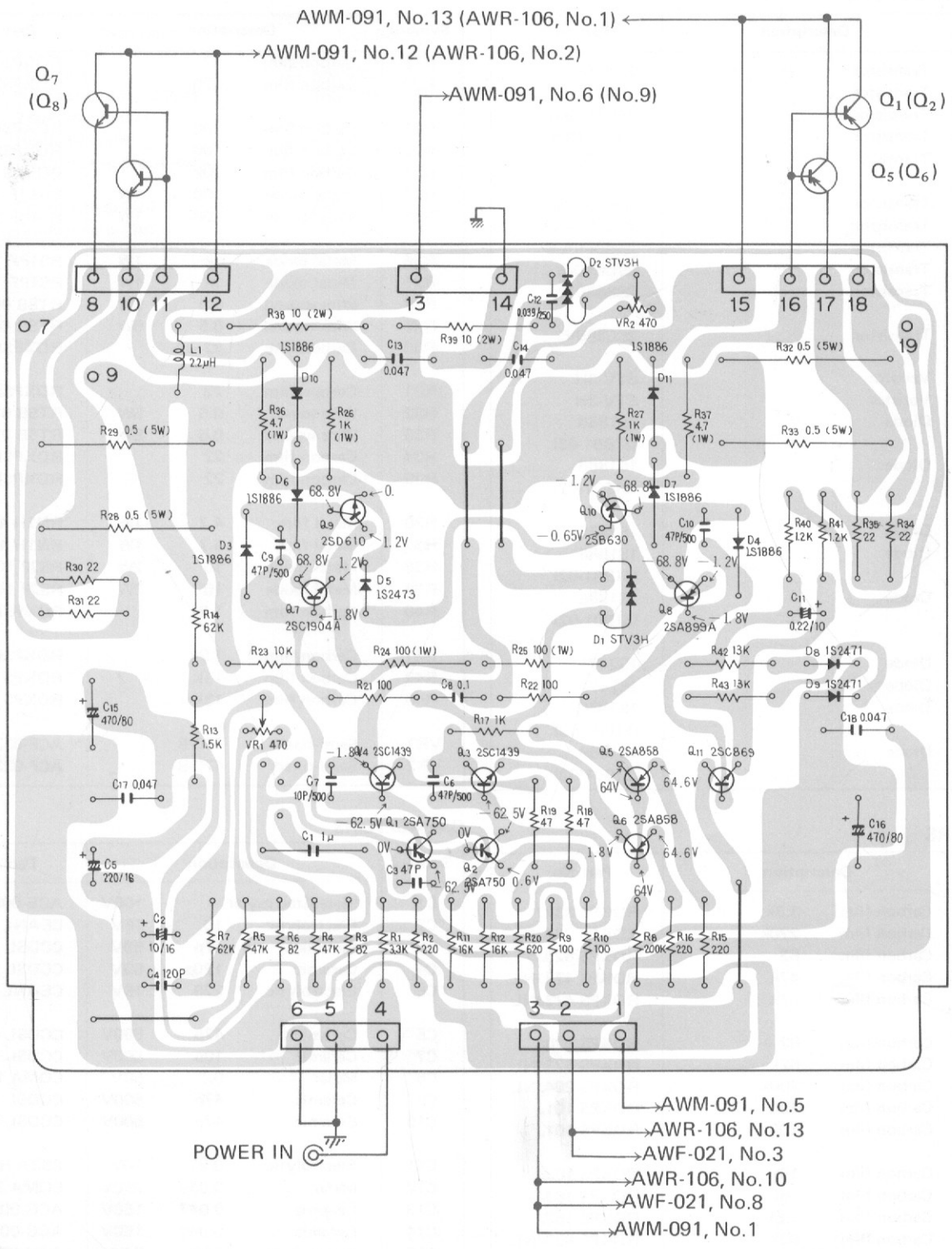
AWM-091, No.13 (AWR-106, No.1)
AWM-091, No.12 (AWR-106, No.2)
AWM-091, No.6 (No.9)
Q7 (Q8)
Q1 (Q2)
Q5 (Q6)
8 10 11 12
13 14
15 16 17 18
6 5 4
3 2 1
POWER IN
AWM-091, No.5
AWR-106, No.13
AWF-021, No.3
AWR-106, No.10
AWF-021, No.8
AWM-091, No.1

Parts List of Power Amplifier Assembly (AWH-048)

SEMICONDUCTORS

Symbol	Description	Part No.
Q1	Transistor	2SA750-E
Q2	Transistor	2SA750-E
Q3	Transistor	2SC1439-B
Q4	Transistor	2SC1439-B
Q5	Transistor	2SA858-B
Q6	Transistor	2SA858-B
Q7	Transistor	2SC1904A-B
Q8	Transistor	2SA899A-B
Q9	Transistor	2SD610-R
Q10	Transistor	2SB630-R
Q11	Transistor	2SC869-C
D1	Varistor	STV-3H
D2	Varistor	STV-3H
D3	Diode	1S1886 (SIB01-02)
D4	Diode	1S1886 (SIB01-02)
D5	Diode	1S2473
D6	Diode	1S1886 (SIB01-02)
D7	Diode	1S1886 (SIB01-02)
D8	Diode	1S2471
D9	Diode	1S2471
D10	Diode	1S1886 (SIB01-02)
D11	Diode	1S1886 (SIB01-02)

RESISTORS

Symbol	Description		Part No.
R1	Carbon film	3.3k	RD¼PS 332J
R2	Carbon film	220k	RD¼PS 224JNL
R3	Carbon film	82	RD¼PS 820J
R4	Carbon film	47k	RD¼PS 473JNL
R5	Carbon film	47k	RD¼PS 473JNL
R6	Carbon film	82	RD¼PS 820J
R7	Carbon film	62k	RD¼PS 623JNL
R8	Carbon film	200k	RD¼PS 204JNL
R9	Carbon film	100	RD¼PS 101J
R10	Carbon film	100	RD¼PS 101J
R11	Carbon film	16k	RD¼PS 163J
R12	Carbon film	16k	RD¼PS 163J
R13	Carbon film	1.5k	RD¼PS 152J
R14	Carbon film	62k	RD¼PS 623JNL
R15	Carbon film	220	RD¼PSF 221J
R16	Carbon film	220	RD¼PSF 221J
R17	Carbon film	1k	RD¼PSF 102J
R18	Carbon film	47	RD¼PS 470J
R19	Carbon film	47	RD¼PS 470J
R20	Carbon film	620	RD¼PSF 621J
R21	Carbon film	100	RD¼PSF 101J
R22	Carbon film	100	RD¼PSF 101J
R23	Carbon film	10k	RD¼PS 103J
R24	Metal oxide	100 1W	RS1PF 101J
R25	Metal oxide	100 1W	RS1PF 101J
R26	Metal oxide	1k 1W	RS1PF 102J
R27	Metal oxide	1k 1W	RS1PF 102J
R28	Wire wound	0.5 5W	RT5B 0R5K
R29	Wire wound	0.5 5W	RT5B 0R5K
R30	Carbon film	22	RD¼PSF 220J
R31	Carbon film	22	RD¼PSF 220J
R32	Wire sound	0.5 5W	RT5B 0R5K
R33	Wire wound	0.5 5W	RT5B 0R5K
R34	Carbon film	22	RD¼PSF 220J
R35	Carbon film	22	RD¼PSF 220J
R36	Metal film	4.7 1W	RN1H 4R7K
R37	Metal film	4.7 1W	RN1H 4R7K
R38	Metal oxide	10 2W	RS2P 100J
R39	Metal oxide	10 2W	RS2P 100J
R40	Carbon film	1.2k	RD¼PSF 122J
R41	Carbon film	1.2k	RD¼PSF 122J
R42	Carbon film	13k	RD¼PS 133J
R43	Carbon film	13k	RD¼PS 133J
VR1	Semi-fixed	470-B	ACP-033
VR2	Semi-fixed	470-B	ACP-033

CAPACITORS

Symbol	Description			Part No.
C1	Metallized mylar	1	100V	ACE-008
C2	Electrolytic	10	16V	CEANL 100P 16
C3	Ceramic	47p	50V	CCDSL 470K 50
C4	Ceramic	120p	50V	CCDSL 121K 50
C5	Electrolytic	220	16V	CEANL 221P 16
C6	Ceramic	47p	500V	CCDSL 470K 500
C7	Ceramic	10p	500V	CCDSL 100K 500
C8	Mylar	0.1	50V	CQMA 104J 50
C9	Ceramic	47p	500V	CCDSL 470K 500
C10	Ceramic	47p	500V	CCDSL 470K 500
C11	Electrolytic	0.22	10V	CSZA R22M 10
C12	Mylar	0.039	250V	CQMA 393J 250
C13	Ceramic	0.047	150V	ACG-009
C14	Ceramic	0.047	150V	ACG-009
C15	Electrolytic	470	80V	ACH-038
C16	Electrolytic	470	80V	ACH-038
C17	Ceramic	0.047	150V	ACG-009
C18	Ceramic	0.047	150V	ACG-009

OTHERS

Symbol	Description	Part No.
	Heat sink	ANH-237
L1	AF choke coil 2.2μH	T63-009
	Transistor socket	AKH-002
	Insulator wafer	AEC-088
	Contact strip (3p, L-type)	AKM-024
	Contact strip (4p)	AKM-034
	Contact strip (3p)	AKM-033

12.15 SPEAKERS SWITCH ASSEMBLY (AWS-095)

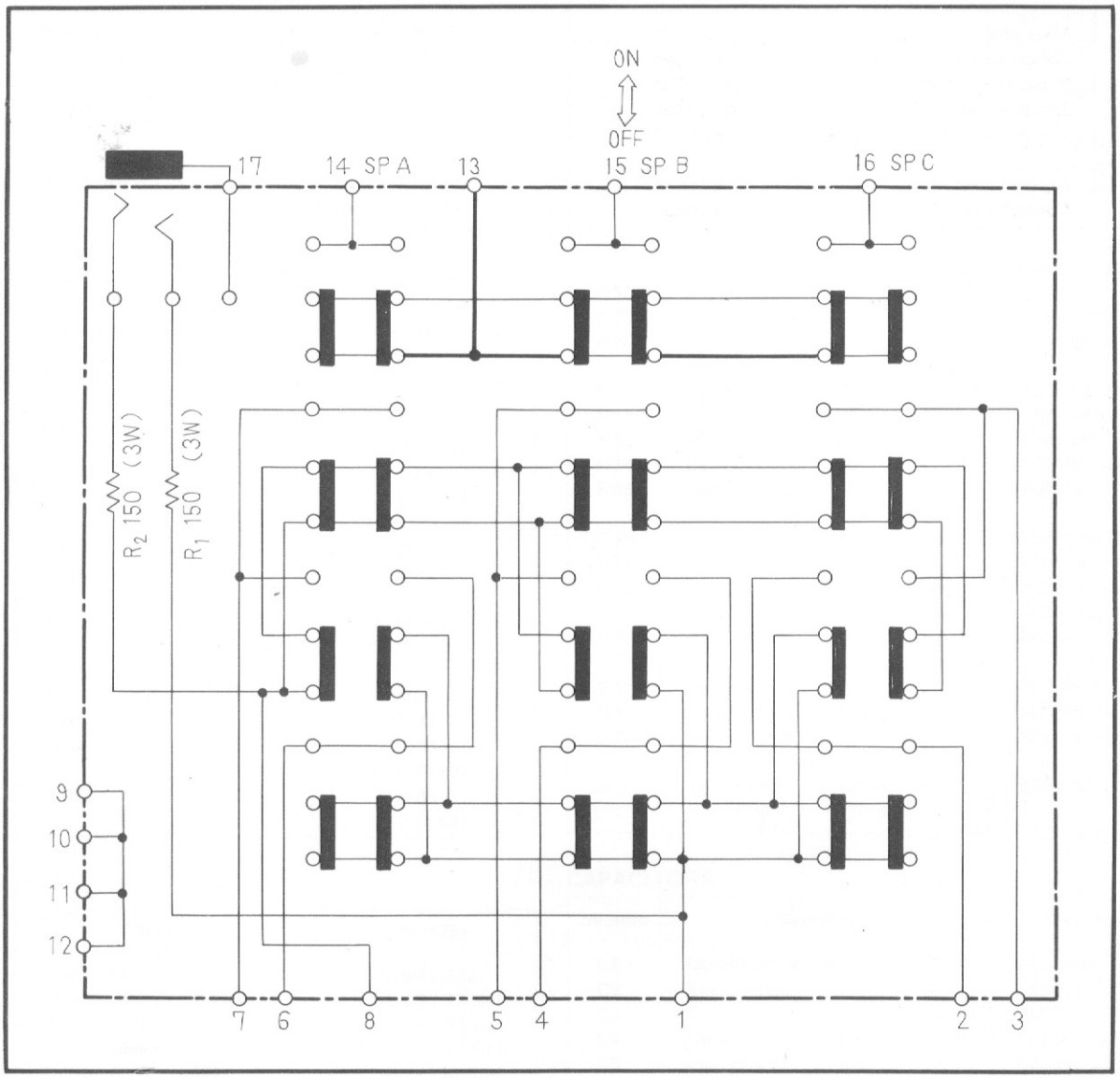

Parts List of Speakers Switch Assembly (AWS-095)

Symbol	Description	Part No.
S1	Push switch (SPEAKERS)	ASG-094
R1	Metal oxide resistor 150 3W	RS3P 151K
R2	Metal oxide resistor 150 3W	RS3P 151K
J1	Phone jack (PHONES)	AKN-010

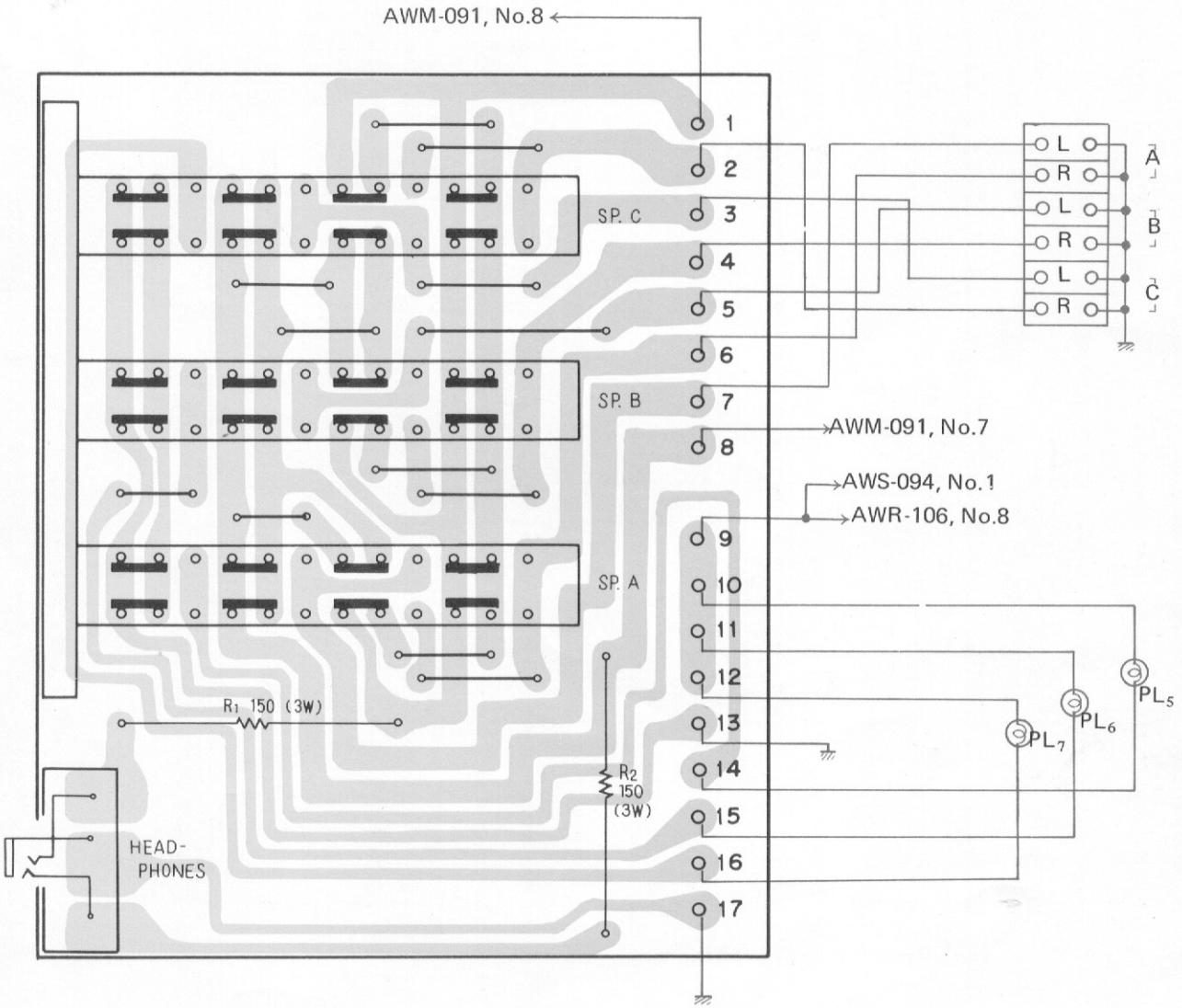
AWM-091, No.8
1
2
3
4
5
6
7
8
9
10
11
12
13
14
15
16
17
SP. C
SP. B
SP. A
L
R
L
R
L
R
A
B
C
AWM-091, No.7
AWS-094, No.1
AWR-106, No.8
PL5
PL6
PL7
R1 150 (3W)
R2
150
(3W)
HEAD-
PHONES

12.16 PROTECTION CIRCUIT ASSEMBLY (AWM-091)

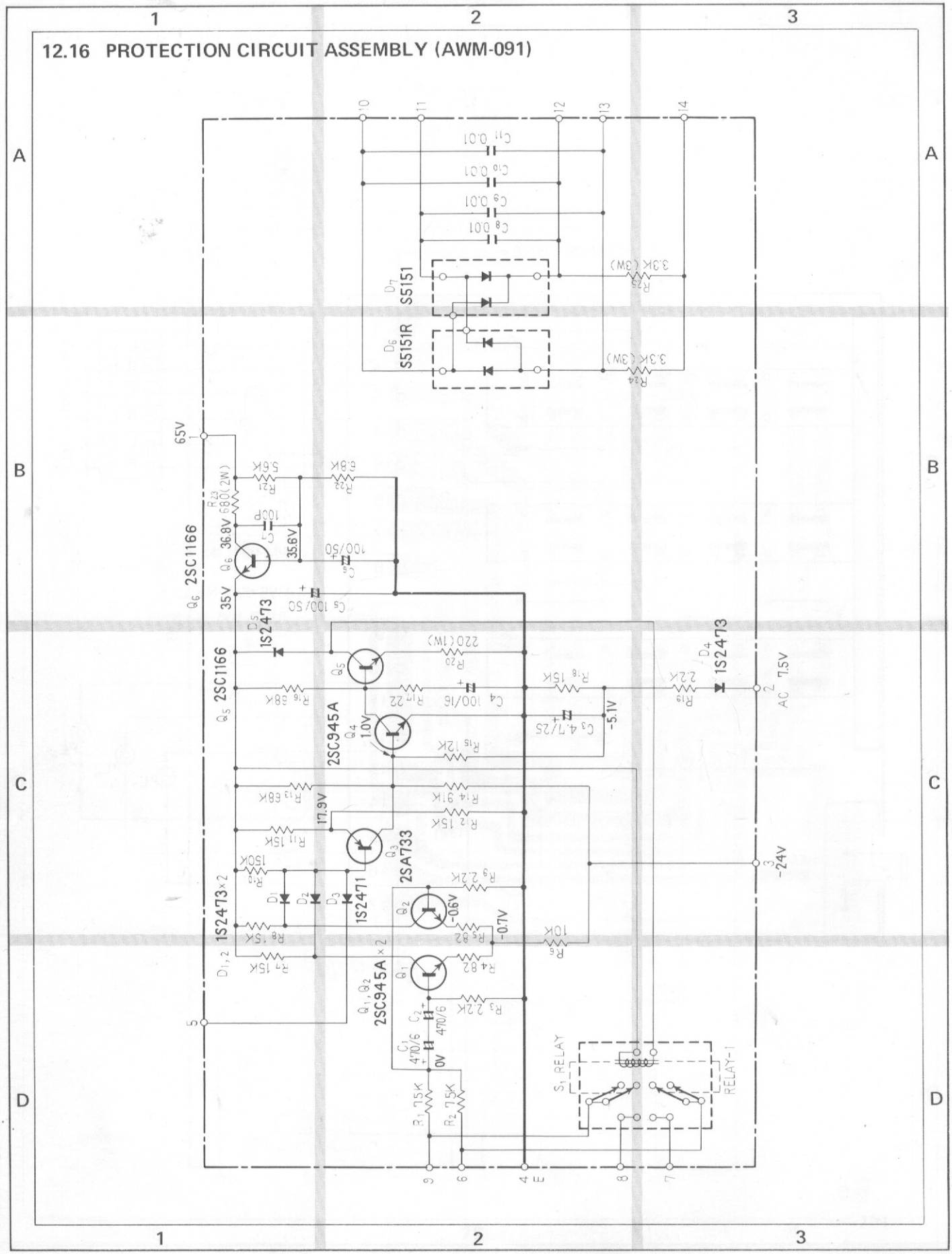

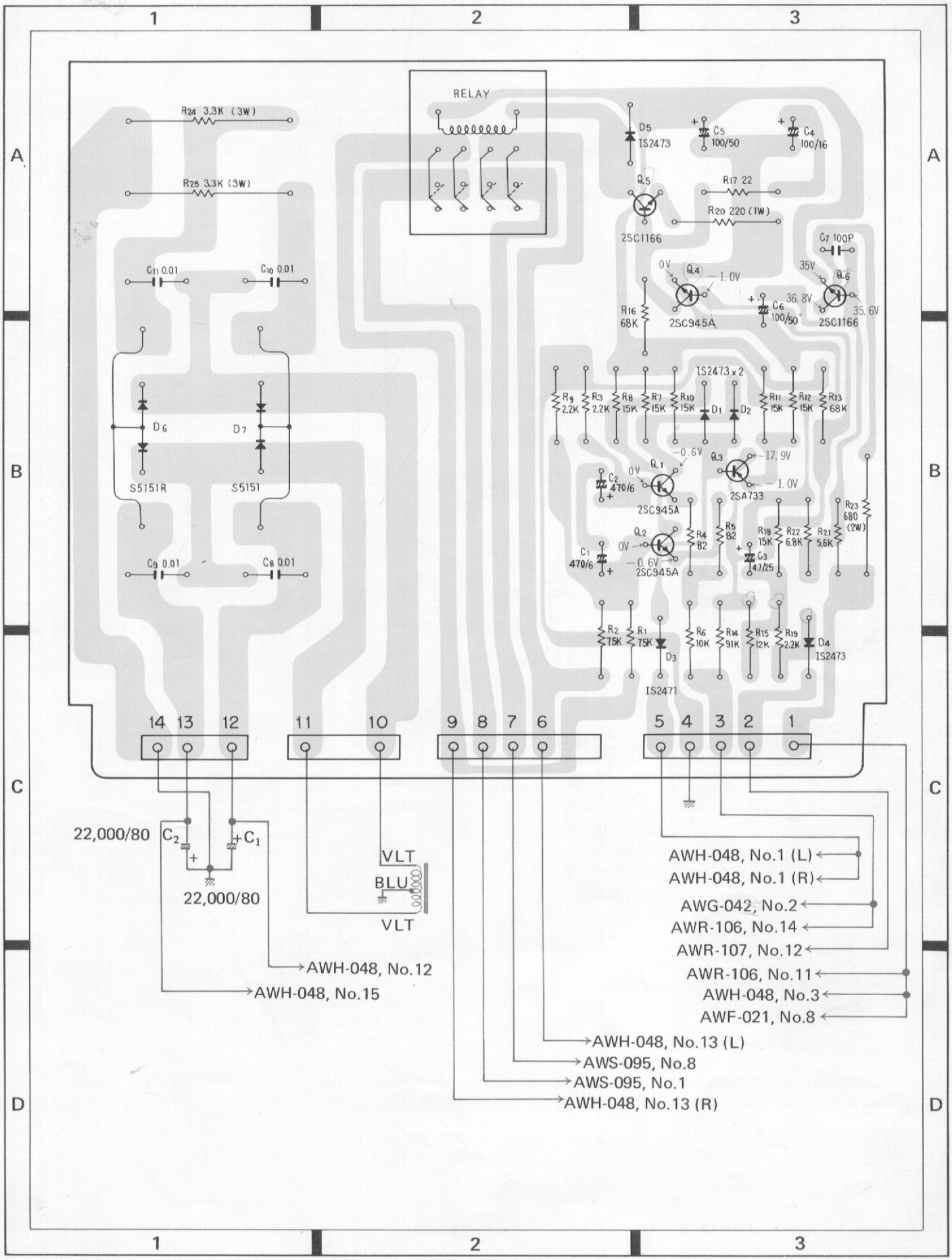
RELAY
R24 3.3K (3W)
R25 3.3K (3W)
C11 0.01
C10 0.01
D6
D7
S5151R
S5151
C9 0.01
C8 0.01
D5 IS2473
C5 100/50
C4 100/16
Q5
2SC1166
R17 22
R20 220 (1W)
C7 100P
Q4
0V
-1.0V
R16 68K
2SC945A
C6 100/50
36.8V
35V
Q6
35.6V
2SC1166
IS2473×2
R9 2.2K
R3 2.2K
R8 15K
R7 15K
R10 15K
D1
D2
R11 15K
R12 15K
R13 68K
-0.6V
Q1
Q3
17.9V
C2 470/6
2SC945A
2SA733
-1.0V
Q2
R4 82
R5 82
R18 15K
R22 6.8K
R21 5.6K
R23 680 (2W)
C1 470/6
C3 47/25
-0.6V
2SC945A
R2 75K
R1 75K
D3
IS2471
R6 10K
R14 91K
R15 12K
R19 2.2K
D4 IS2473
14 13 12 11 10 9 8 7 6 5 4 3 2 1
22,000/80
C2
+C1
22,000/80
VLT
BLU
VLT
AWH-048, No.12
AWH-048, No.15
AWH-048, No.1 (L)
AWH-048, No.1 (R)
AWG-042, No.2
AWR-106, No.14
AWR-107, No.12
AWR-106, No.11
AWH-048, No.3
AWF-021, No.8
AWH-048, No.13 (L)
AWS-095, No.8
AWS-095, No.1
AWH-048, No.13 (R)

Parts List of Protection Circuit Assembly (AWM-091)

SEMICONDUCTORS

Symbol	Description	Part No.
Q1	Transistor	2SC945A-Q (2SC1647-P)
Q2	Transistor	2SC945A-Q (2SC1647-P)
Q3	Transistor	2SA733-Q
Q4	Transistor	2SC945A-Q (2SC1647-P)
Q5	Transistor	2SC1166-Y (2SC1384-Q)
Q6	Transistor	2SC1166-Y (2SC1384-Q)
D1	Diode	1S2473
D2	Diode	1S2473
D3	Diode	1S2471
D4	Diode	1S2473
D5	Diode	1S2473
D6	Diode	S5151R
D7	Diode	S5151

CAPACITORS

Symbol	Description			Part No.
C1	Electrolytic	470	6V	CEA 471P 6
C2	Electrolytic	470	6V	CEA 471P 6
C3	Electrolytic	4.7	25V	CEA 4R7P 25
C4	Electrolytic	100	16V	CEA 101P 16
C5	Electrolytic	100	50V	CEA 101P 50
C6	Electrolytic	100	50V	CEA 101P 50
C7	Ceramic	100p	50V	CCDSL 101K 50
C8	Ceramic	0.01	150V	ACG-004
C9	Ceramic	0.01	150V	ACG-004
C10	Ceramic	0.01	150V	ACG-004
C11	Ceramic	0.01	150V	ACG-004

OTHERS

Symbol	Description	Part No.
S1	Relay	ASR-010
	Contact strip (3p, L-type)	AKM-024
	Contact strip (5p, L-type)	AKM-025

RESISTORS

Symbol	Description			Part No.
R1	Carbon film	75k		RD¼PS 753J
R2	Carbon film	75k		RD¼PS 753J
R3	Carbon film	2.2k		RD¼PS 222J
R4	Carbon film	82		RD¼PS 820J
R5	Carbon film	82		RD¼PS 820J
R6	Carbon film	10k		RD¼PS 103J
R7	Carbon film	15k		RD¼PS 153J
R8	Carbon film	15k		RD¼PS 153J
R9	Carbon film	2.2k		RD¼PS 222J
R10	Carbon film	150k		RD¼PS 154J
R11	Carbon film	15k		RD¼PS 153J
R12	Carbon film	15k		RD¼PS 153J
R13	Carbon film	68k		RD¼PS 683J
R14	Carbon film	91k		RD¼PS 913J
R15	Carbon film	12k		RD¼PS 123J
R16	Carbon film	68k		RD¼PS 683J
R17	Carbon film	22		RD¼PS 220J
R18	Carbon film	15k		RD¼PS 153J
R19	Carbon film	2.2k		RD¼PS 222J
R20	Metal oxide	220	1W	RS1P 211J
R21	Carbon film	5.6k		RD¼PS 562J
R22	Carbon film	6.8k		RD¼PS 682J
R23	Metal oxide	680	2W	RS2P 681J
R24	Metal oxide	3.3k	3W	RS3P 332K
R25	Metal oxide	3.3k	3W	RS3P 332K

12.17 STABILIZER ASSEMBLY (AWR-106)

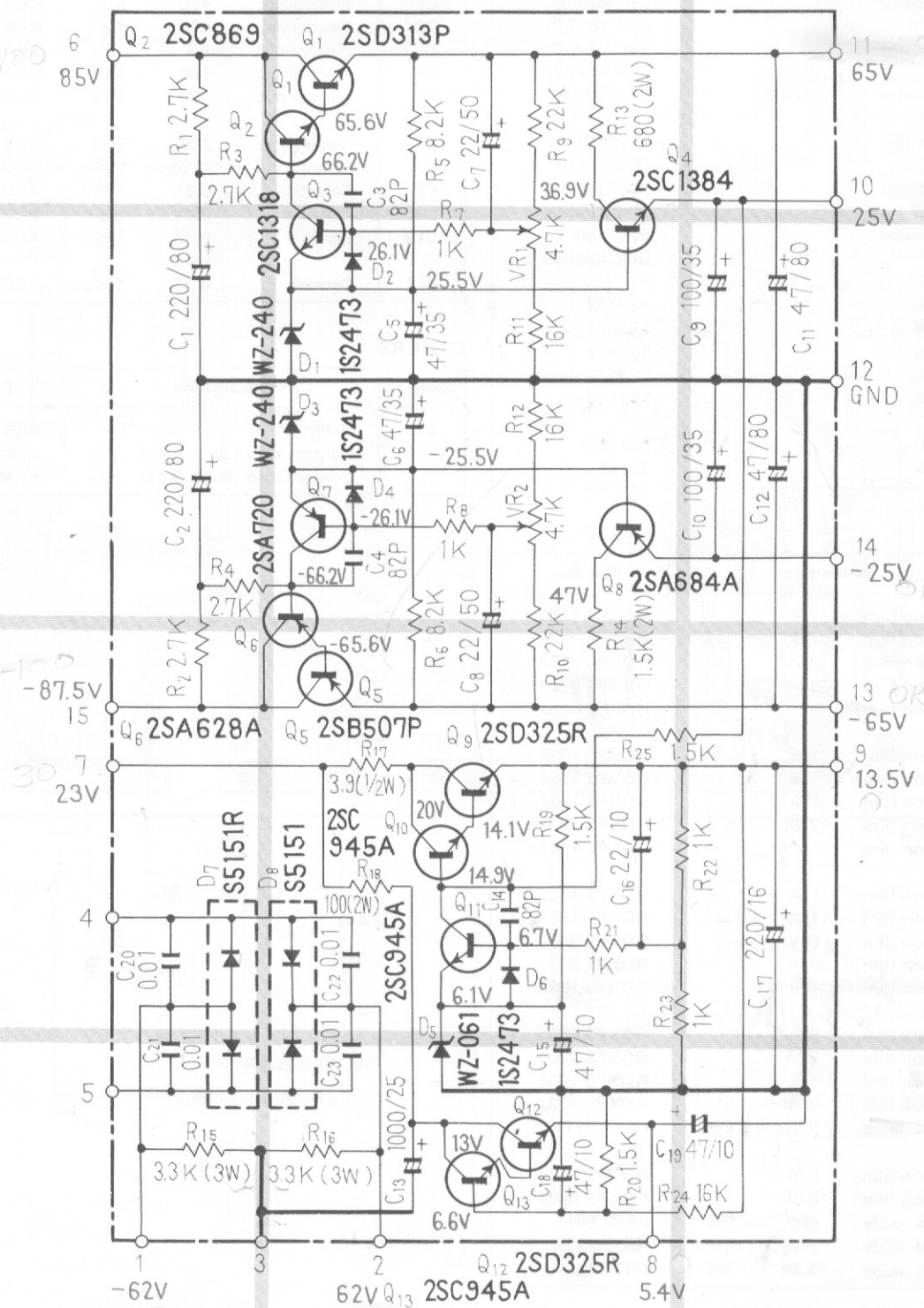

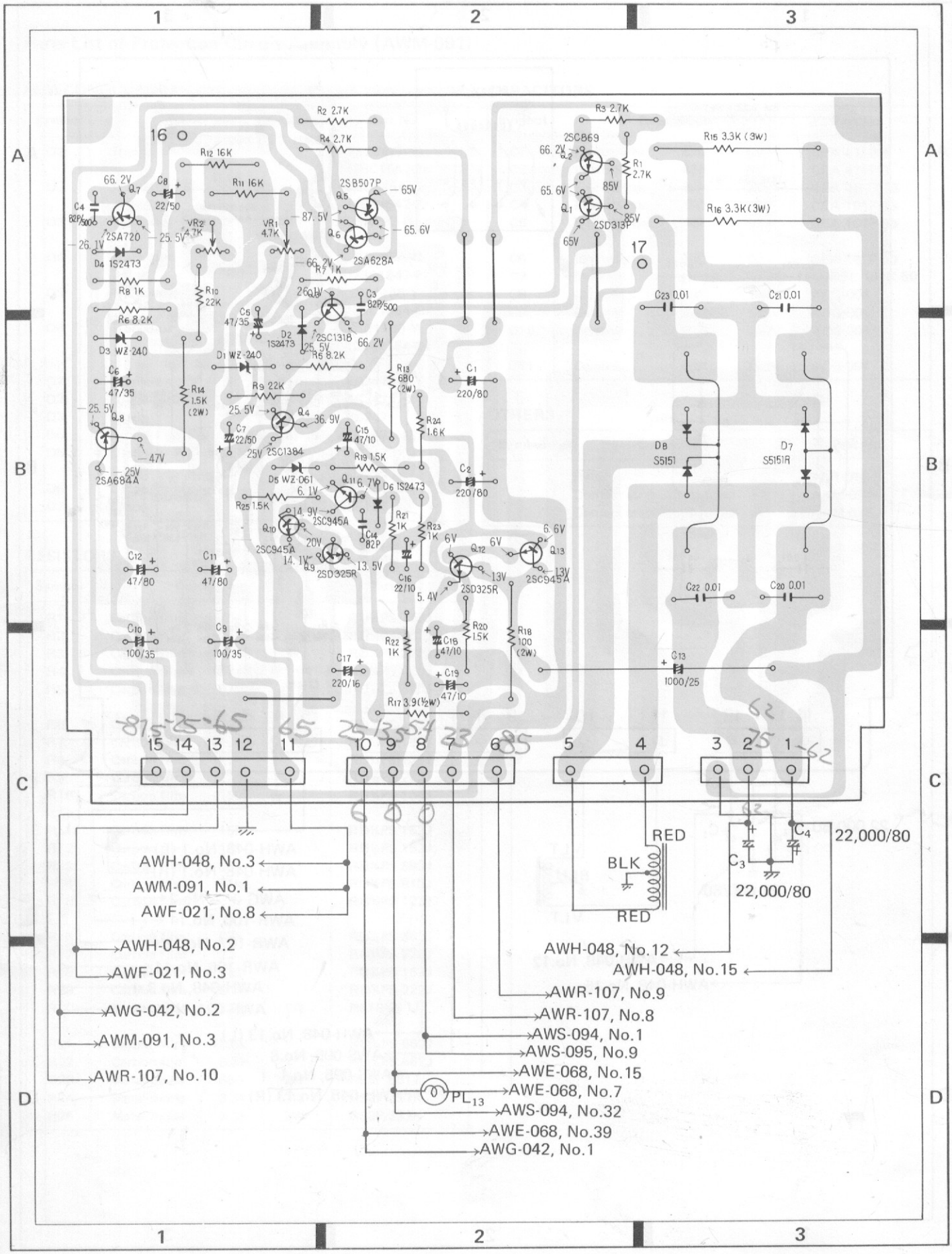

1
2
3
A
B
C
D
16
17
R2 2.7K
R4 2.7K
R3 2.7K
R12 16K
R11 16K
R15 3.3K (3W)
R16 3.3K (3W)
R1 2.7K
2SC869
2SD313P
2SB507P
2SA628A
2SA720
2SA684A
2SC1318
2SC1384
2SC945A
2SD325R
2SC945A
D4 1S2473
D3 WZ-240
D1 WZ-240
D5 WZ-061
D6 1S2473
D8 S5151
D7 S5151R
C23 0.01
C21 0.01
C22 0.01
C20 0.01
C13 1000/25
C1 220/80
C2 220/80
C12 47/80
C11 47/80
C10 100/35
C9 100/35
C17 220/16
C19 47/10
C18 47/10
C16 22/10
C14 82P
C15 47/10
C7 22/50
C6 47/35
C5 47/35
C8 22/50
C4 82P/500
C3 82P/500
C3 22,000/80
C4 22,000/80
R17 3.9(½W)
R18 100 (2W)
R20 1.5K
R22 1K
R21 1K
R23 1K
R24 1.6K
R13 680 (2W)
R19 1.5K
R25 1.5K
R8 1K
R6 8.2K
R10 22K
R14 1.5K (2W)
R9 22K
R7 1K
R5 8.2K
VR1 4.7K
VR2 4.7K
RED
BLK
RED
AWH-048, No.3
AWM-091, No.1
AWF-021, No.8
AWH-048, No.2
AWF-021, No.3
AWG-042, No.2
AWM-091, No.3
AWR-107, No.10
AWH-048, No.12
AWH-048, No.15
AWR-107, No.9
AWR-107, No.8
AWS-094, No.1
AWS-095, No.9
AWE-068, No.15
AWE-068, No.7
AWS-094, No.32
AWE-068, No.39
AWG-042, No.1
PL13

Parts List of Stabilizer Assembly (AWR-106)

SEMICONDUCTORS

Symbol	Description	Part No.
Q1	Transistor	2SD313P-E
Q2	Transistor	2SC869-D
Q3	Transistor	2SC1318-R
Q4	Transistor	2SC1384-R
Q5	Transistor	2SB507P-E
Q6	Transistor	2SA628A-D
Q7	Transistor	2SA720-R
Q8	Transistor	2SA684A-R
Q9	Transistor	2SD325R-E
Q10	Transistor	2SC945A-R
Q11	Transistor	2SC945A-R
Q12	Transistor	2SD325R-E
Q13	Transistor	2SC945A-R
D1	Zener diode	WZ-240
D2	Diode	1S2473
D3	Zener diode	WZ-240
D4	Diode	1S2473
D5	Zener diode	WZ-061
D6	Diode	1S2473
D7	Diode	S5151R
D8	Diode	S5151

RESISTORS

Symbol	Description			Part No.
R1	Carbon film	2.7k		RD¼PSF 272J
R2	Carbon film	2.7k		RD¼PSF 272J
R3	Carbon film	2.7k		RD¼PS 272J
R4	Carbon film	2.7k		RD¼PS 272J
R5	Carbon film	8.2k		RD¼PS 822J
R6	Carbon film	8.2k		RD¼PS 822J
R7	Carbon film	1k		RD¼PS 102J
R8	Carbon film	1k		RD¼PS 102J
R9	Carbon film	22k		RD¼PS 223J
R10	Carbon film	22k		RD¼PS 223J
R11	Carbon film	16k		RD¼PS 163J
R12	Carbon film	16k		RD¼PS 163J
R13	Metal oxide	680	2W	RS2P 681K
R14	Metal oxide	1.5k	2W	RS2P 152K
R15	Metal oxide	3.3k	3W	RS3P 332K
R16	Metal oxide	3.3k	3W	RS3P 332K
R17	Carbon film	3.9	½W	RD½PSF 3R9J
R18	Metal oxide	100	2W	RS2P 101K
R19	Carbon film	1.5k		RD¼PS 152J
R20	Carbon film	1.5k		RD¼PS 152J
R21	Carbon film	1k		RD¼PS 102J
R22	Carbon film	1k		RD¼PS 102J
R23	Carbon film	1k		RD¼PS 102J
R24	Carbon film	1.6k		RD¼PS 162J
R25	Carbon film	1.5k		RD¼PS 152J
VR1	Semi-fixed	4.7k-B		ACP-034
VR2	Semi-fixed	4.7k-B		ACP-034

CAPACITORS

Symbol	Description			Part No.
C1	Electrolytic	220	80V	CEA 221P 80
C2	Electrolytic	220	80V	CEA 221P 80
C3	Ceramic	82p	500V	CCDSL 820K 500
C4	Ceramic	82p	500V	CCDSL 820K 500
C5	Electrolytic	47	35V	CEA 470P 35
C6	Electrolytic	47	35V	CEA 470P 35
C7	Electrolytic	22	50V	CEA 220P 50
C8	Electrolytic	22	50V	CEA 220P 50
C9	Electrolytic	100	35V	CEA 101P 35
C10	Electrolytic	100	35V	CEA 101P 35
C11	Electrolytic	47	80V	CEA 470P 80
C12	Electrolytic	47	80V	CEA 470P 80
C13	Electrolytic	1000	25V	CEB 102P 25
C14	Ceramic	82p	50V	CCDSL 820K 50
C15	Electrolytic	47	10V	CEA 470P 10
C16	Electrolytic	22	10V	CEA 220P 10
C17	Electrolytic	220	16V	CEA 221P 16
C18	Electrolytic	47	10V	CEA 470P 10
C19	Electrolytic	47	10V	CEA 470P 10
C20	Ceramic	0.01	150V	ACG-004
C21	Ceramic	0.01	150V	ACG-004
C22	Ceramic	0.01	150V	ACG-004
C23	Ceramic	0.01	150V	ACG-004

OTHERS

Symbol	Description	Part No.
	Heat sink	ANH-237
	Heat sink	ANH-300
	Transistor socket	AKH-002
	Insulator wafer	ACE-088
	Contact strip (3p, L-type)	AKM-024
	Contact strip (5p, L-type)	AKM-025

12.18 POWER SUPPLY ASSEMBLY (AWR-107)

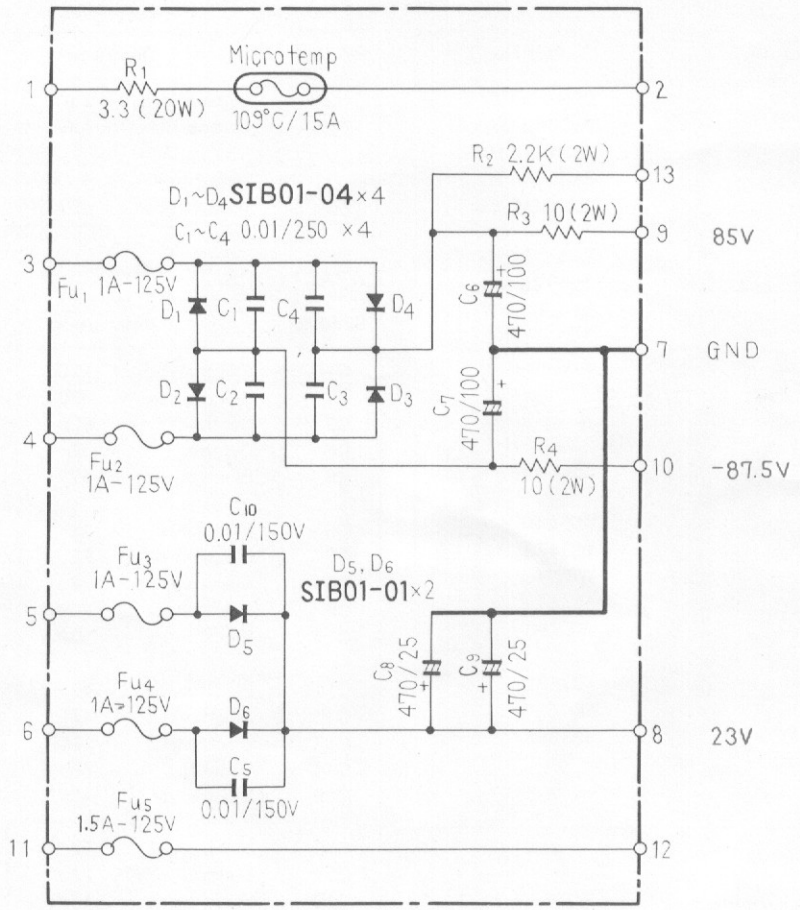

Parts List of Power Supply Assembly (AWR-107)

SEMICONDUCTORS

Symbol	Description	Part No.
D1	Diode	SIB01-04
D2	Diode	SIB01-04
D3	Diode	SIB01-04
D4	Diode	SIB01-04
D5	Diode	SIB01-01 (1S1885)
D6	Diode	SIB01-01 (1S1885)

RESISTORS

Symbol	Description			Part No.
R1	Wire wound	3.3	20W	ACN-003
R2	Metal oxide	2.2K	2W	RS2P 222J
R3	Metal oxide	10	2W	RS2P 100K
R4	Metal oxide	10	2W	RS2P 100K

CAPACITORS

Symbol	Description			Part No.
C1	Ceramic	0.01	250V	ACG-001
C2	Ceramic	0.01	250V	ACG-001
C3	Ceramic	0.01	250V	ACG-001
C4	Ceramic	0.01	250V	ACG-001
C5	Ceramic	0.01	150V	ACG-004
C6	Electrolytic	470	100V	CEB 471P 100
C7	Electrolytic	470	100V	CEB 471P 100
C8	Electrolytic	470	25V	CEA 471P 25
C9	Electrolytic	470	25V	CEA 471P 25
C10	Ceramic	0.01	150V	ACG-004

OTHERS

Symbol	Description	Part No.
	Fuse clip	AKR-013
	Fuse clip	AKR-030
	MICROTEMP	AEX-005

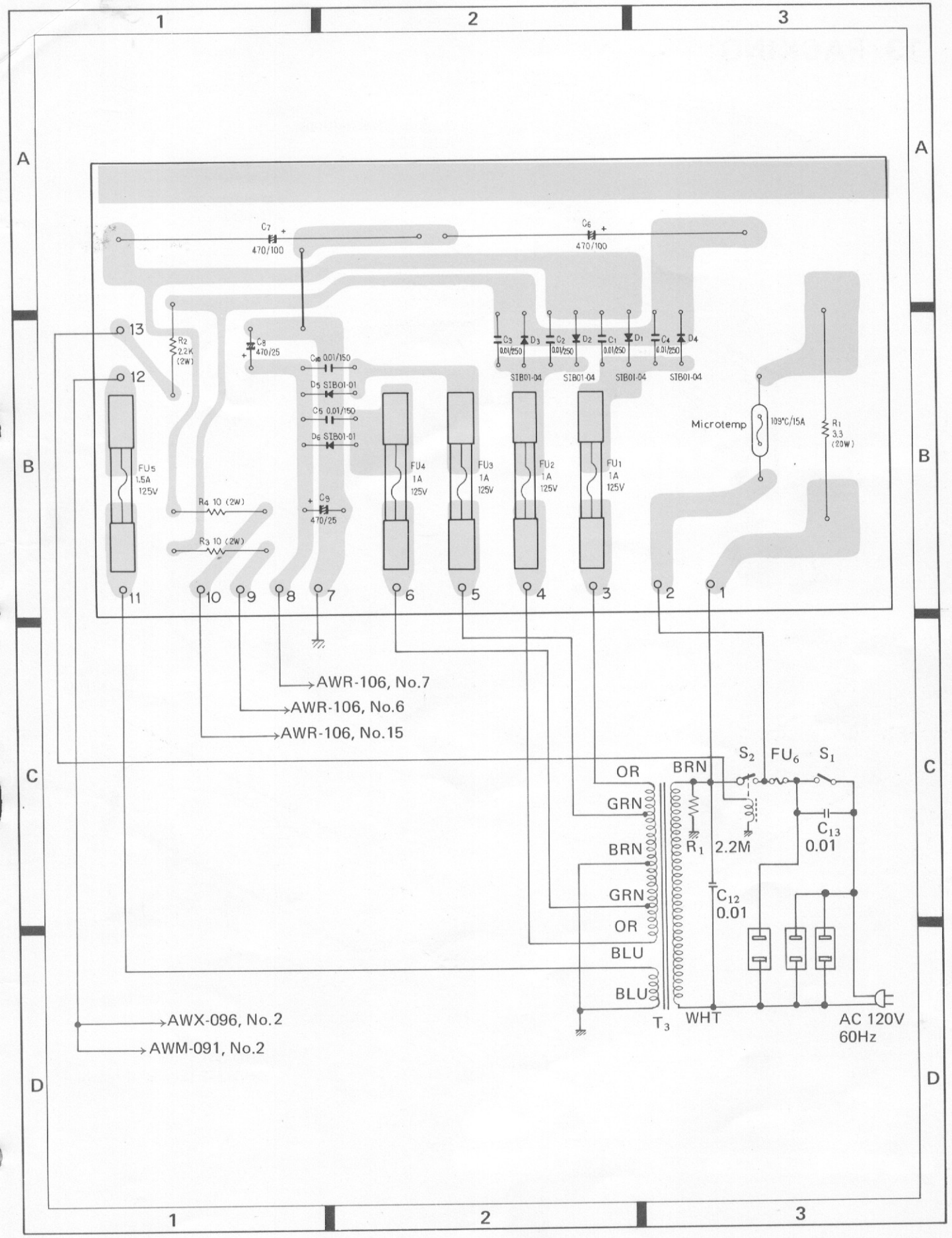
1
2
3
A
B
C
D
C7 470/100
C6 470/100
13
12
R2 2.2K (2W)
C8 470/25
C10 0.01/150
D5 SIB01-01
C5 0.01/150
D6 SIB01-01
C9 470/25
R4 10 (2W)
R3 10 (2W)
FU5 1.5A 125V
FU4 1A 125V
FU3 1A 125V
FU2 1A 125V
FU1 1A 125V
C3 0.01/250
D3
C2 0.01/250
D2
C1 0.01/250
D1
C4 0.01/250
D4
SIB01-04
SIB01-04
SIB01-04
SIB01-04
Microtemp 109°C/15A
R1 3.3 (20W)
11
10
9
8
7
6
5
4
3
2
1
AWR-106, No.7
AWR-106, No.6
AWR-106, No.15
S2
FU6
S1
OR
GRN
BRN
GRN
OR
BLU
BLU
BRN
R1 2.2M
C12 0.01
C13 0.01
T3
WHT
AC 120V 60Hz
AWX-096, No.2
AWM-091, No.2

13. PACKING

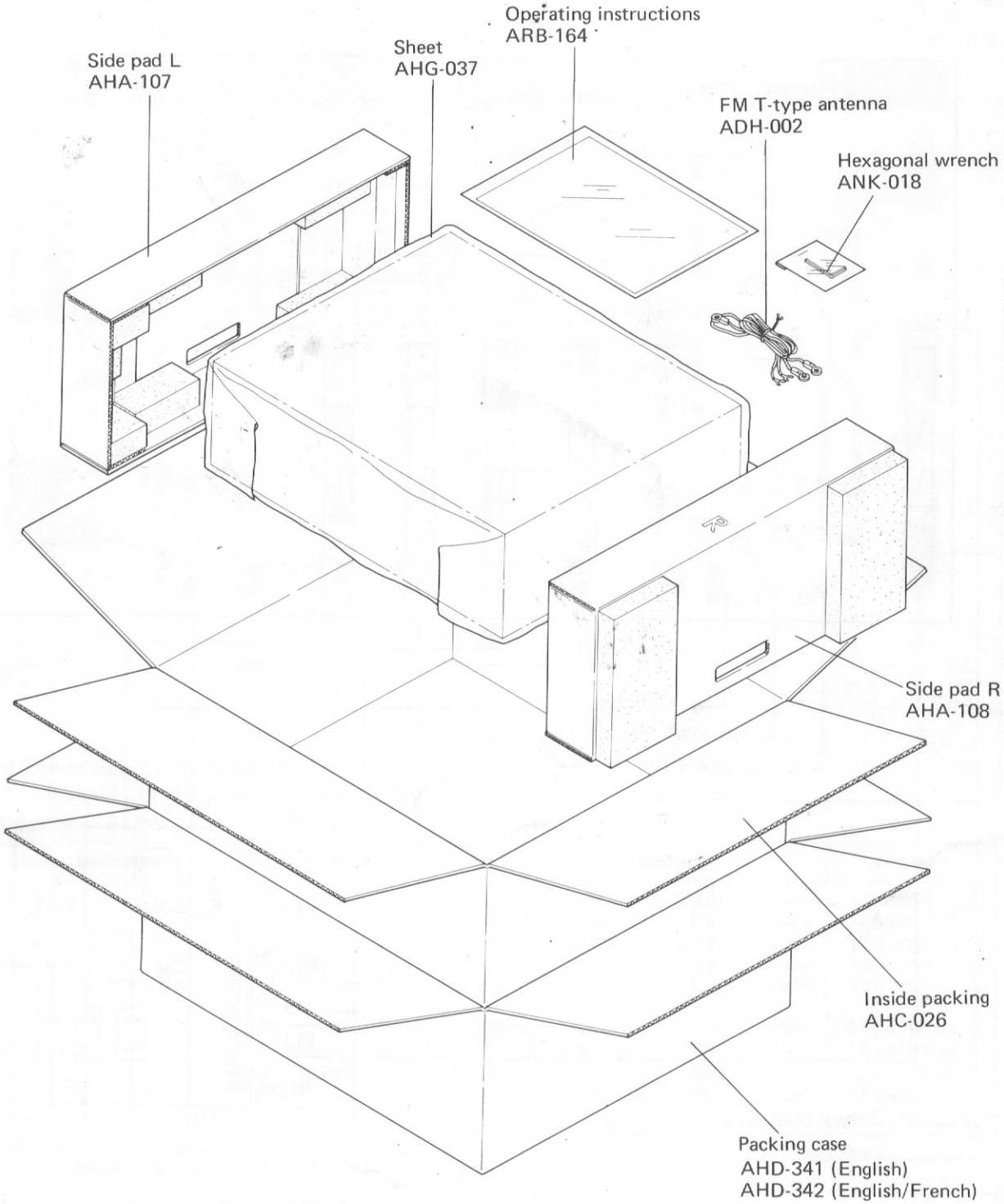
Operating instructions
ARB-164
Sheet
AHG-037
Side pad L
AHA-107
FM T-type antenna
ADH-002
Hexagonal wrench
ANK-018
Side pad R
AHA-108
Inside packing
AHC-026
Packing case
AHD-341 (English)
AHD-342 (English/French)

14. PARTS LIST OF EXPLODED VIEWS

Parts No.	Parts Name
AAA-034	Knob
AAB-100	Knob
AAB-104	Knob
AAD-113	Knob
AAD-114	Knob
AAF-051	Dial Pointer
AAG-106	Dial Scale Plate
AAP-037	Blind Sash
AAT-025	Shaft Cover
AAT-026	Indicator
AAT-027	Indicator
AAT-028	Indicator
AAW-040	Double Meter
ABA-002	Screw
ABA-012	Screw
ABA-081	Screw
ABA-087	Screw
ABA-113	Screw
ABA-114	Pulley Shaft
ABA-116	Screw
ABA-123	Screw
ABA-129	Screw
ABE-006	Washer
ABE-018	Washer
ABH-022	Coil Spring
ABN-021	Nut
ABN-022	Panel Base
ABN-023	Washer Faced Nut
ABN-024	Washer Faced Nut
ACG-001	Capacitor (HG, S)
ACG-003	Capacitor (KCU)
ACH-056	Capacitor
ACV-163	Variable Resistor
ACV-165	Variable Resistor
ACV-166	Variable Resistor
ACV-167	Variable Resistor
ACV-168	Variable Resistor
ACV-169	Variable Resistor
ADG-013	AC Power Cord (KCU)
ADG-015	AC Power Cord (S)
ADH-002	FM Antenna
ADX-029	Cable Housing
ADX-030	Cable Housing
ADX-031	Cable Housing
ADX-032	Cable Housing
ADX-033	Cable Housing
ADX-034	Cable Housing
ADX-035	Cable Housing
ADX-036	Cable Housing
ADX-037	Cable Housing

Parts No.	Parts Name
ADX-038	Cable Housing
ADX-039	Cable Housing
AEB-085	Rubber Bracket A
AEB-086	Rubber Bracket B
AEB-087	Rubber Spacer
AEC-076	Insulator Wafer
AEC-079	Strain Relief
AEC-101	Pulley
AEC-151	Wire Supporter
AEC-178	Foot
AEC-256	Pulley
AEC-258	Spacer
AEC-272	Acrylic Board
AED-018	Mask
AEK-104	Fuse (1.5A) (KCU, S)
AEK-106	Fuse (1A) (KCU, S)
AEK-109	Fuse (6A) (S)
AEK-301	Fuse (12A) (KCU, S)
AEK-402	Fuse (1A) (HG)
AEK-404	Fuse (6.3A) (HG)
AEK-405	Fuse (1.6A) (HG)
AEL-056	Lamp Ass
AEL-069	Lamp
AEL-072	Lamp
AEL-073	Lamp
AEL-074	Lamp
AEL-075	Lamp
AEL-076	Lamp
AHA-107	Side Pad L
AHA-108	Side Pad R
AHC-026	Inner Packing
AHD-341	Packing Case (KU, S, HG)
AHD-342	Packing Case (KC)
AHG-037	Sheet
AKA-004	Terminal
AKB-019	Terminal
AKB-030	Terminal
AKB-033	Terminal
AKC-030	Terminal Strip 2P
AKC-038	Terminal Strip 2P
AKE-012	Terminal
AKE-014	Terminal
AKF-053	Connecting Plate
AKH-001	Transistor Socket
AKN-010	Phone Jack
AKN-013	Phone Jack
AKP-005	AC Socket (KCU, S)
AKP-007	5P Connector Socket
AKP-008	AC Socket (HG)
AKR-028	Fuse Holder 1P

Parts No.	Parts Name
AKR-031	Plug in Selector
AKX-031	Plug in Selector
AMM-049	Wooden Cover
ANB-386	Front Panel Ass
ANE-105	Top Panel
ANK-018	Hexagonal Wrench
ARB-164	Operating Instruction
ARB-168	Operating Instruction
ARB-171	Operating Instruction
ARD-089	Operating Instruction
ASG-094	Push Switch
ASG-095	Push Switch
ASG-098	Push Switch
ASH-015	Slide Switch
ASK-080	Power Switch (KCU)
ASK-084	Lever Switch
ASK-090	Lever Switch
ASK-092	Lever Switch
ASK-099	Power Switch (S)
ASK-105	Power Switch (HG)
ASR-015	Relay
ATB-051	Ferrite Bar Antenna
ATT-267	Power Trans (KCU)
ATT-291	Power Trans (S)
ATT-295	Power Trans (HF)
AWB-023	FM Front End
AWE-068	Tuner Ass
AWF-021	EQ Amp Ass
AWG-041	Control Amp Ass
AWG-042	Flat Amp Ass
AWH-048	Power Amp Ass
AWM-089	Filter Amp Ass
AWM-091	Protection Ass
AWR-106	Stabilizer Ass
AWR-107	Power Supply Ass
AWR-108	Power Supply Ass
AWS-094	Function Switch Ass
AWS-095	Speaker Switch Ass
AWS-098	Speaker Switch Ass
AWX-062	5P Connector Ass
AWX-096	Lamp Board Ass
AWX-097	Mic Jack Ass
AWX-099	Switch Ass (KCU)
AWX-100	Switch Ass (S)
AXA-070	Tuning Drum Ass
AXA-111	Tuning Shaft Ass
B71-004	Nut
B71-010	Nut
M45-086	Washer
T22-025	Ferrite Balun

Parts No.	Parts Name
W72-092	Bar Antenna Holder
2SD555-R	Transistor
2SB600R	Transistor

15. SUPPLEMENTS FOR SX-1250/HG AND SX-1250/S

For servicing of the SX-1250/HG or S please refer to pp.4—100, with the exception of the power supply section and the de-emphasis selector which are described in this supplement.

15.1 CONTRAST OF MISCELLANEOUS-PARTS

FUSES

Symbol	Amp	Part No.			Remarks
		KCU type	HG type	S type	
FU1-4	1A	AEK-106	AEK-402	AEK-106	Secondary
FU5	1.5A 1.6A	AEK-104	..... AEK-405	AEK-104	Lamp circuits
FU6	12A 6.3A 6A	AEK-301	..... AEK-404	AEK-301 ..... AEK-109	Primary voltage : 110V, 120V Primary voltage : 220V, 240V Primary voltage : 220V, 240V

SWITCHES

Symbol	Part Name	Part No.			Remarks
		KCU type	HG type	S type	
S1	Lever switch	ASK-080	ASK-105	ASK-099	POWER
S3	Plug in selector (Line voltage selector)	....	AKX-037	..... AKR-031	2-position 4-position with fuse holder

TRANSFORMER

Symbol	Part Name	Part No.			Remarks
		KCU type	HG type	S type	
T3	Power Transformer	ATT-267	ATT-295	ATT-291	

RESISTOR

Symbol	Part Name	Part No.			Remarks
		KCU type	HG type	S type	
R1	Carbon film 2.2M ½W	RD½PS 225J	.....	.....	

CAPACITORS

Symbol	Part Name	Part No.			Remarks
		KCU type	HG type	S type	
C12	Ceramic 0.01 150V Ceramic 0.01 250V	ACG-003	..... ACG-001	..... ACG-001	DC1.4kV
C13	Ceramic 0.01 150V Ceramic 0.01 250V	ACG-003	....	..... ACG-001	DC1.4kV
C15	Polystyrene 510p 50V	.....	CQSA511J50	.....	
C16	Polystyrene 510p 50V	.....	CQSA511J50	.....	
C17	Ceramic 56p 50V	.....	CCDSL560K50	.....	

P.C. BOARD ASSEMBLIES

Part Name	Part No.			Remarks
	KCU type	HG type	S type	
De-emphasis switch assembly	AWX-099	. . . .	. . . . . . AWX-101	2-position (25μs/75μs) 3-position (25μs/50μs/75μs)
Power supply assembly	AWR-107	AWR-108	AWR-107	
Speakers switch assembly	AWS-095	AWS-098	AWS-095	

OTHERS

Part Name	Part No.			Remarks
	KCU type	HG type	S type	
AC power cord	ADG-013	. . . . .	ADG-015	
AC socket (OUTLET) AC socket (INLET)	AKP-005	. . . . . . AKP-008	AKP-005	
Operating instructions	ARB-164	ARB-171 ARD-089	ARB-168	English German/French

15.3 SCHEMATIC DIAGRAM FOR SX-1250/HG

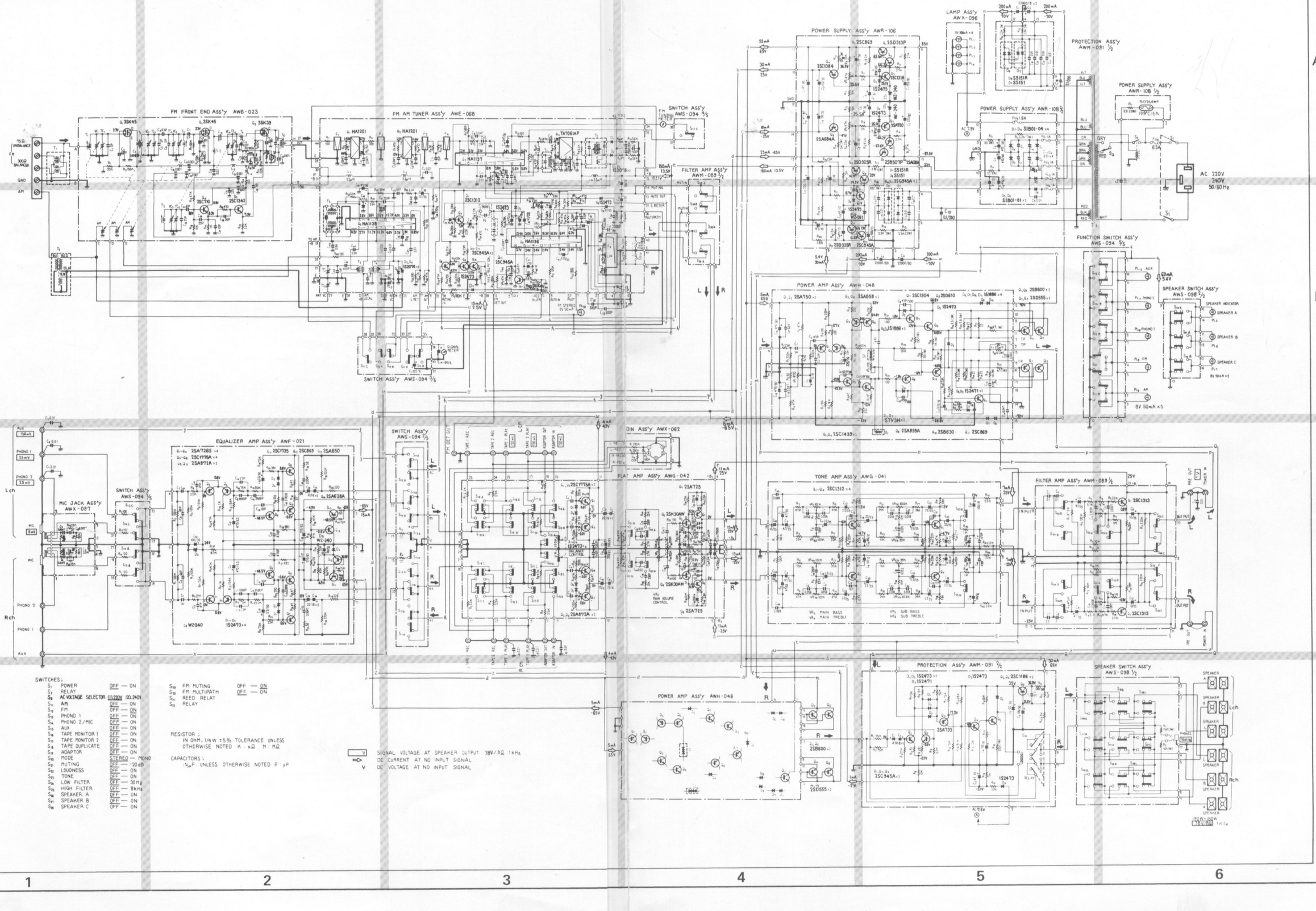
FM FRONT END ASS'y AWB-023
FM AM TUNER ASS'y AWE-068
SWITCH ASS'y AWS-094 5/5
FILTER AMP ASS'y AWH-083 1/2
POWER SUPPLY ASS'y AWR-106
LAMP ASS'y AWX-096
PROTECTION ASS'y AWR-091 1/2
POWER SUPPLY ASS'y AWR-108 1/2
POWER SUPPLY ASS'y AWR-108 2/2
FUNCTION SWITCH ASS'y AWS-094 5/5
SPEAKER SWITCH ASS'y AWS-098 1/2
POWER AMP ASS'y AWH-048
DIN ASS'y AWX-062
EQUALIZER AMP ASS'y AWF-021
SWITCH ASS'y AWS-094 1/5
MIC JACK ASS'y AWX-087
FLAT AMP ASS'y AWG-042
TONE AMP ASS'y AWG-041
FILTER AMP ASS'y AWH-089 1/2
PROTECTION ASS'y AWH-091 2/2
SPEAKER SWITCH ASS'y AWS-098 1/2
AC 220V 240V 50/60Hz
SWITCHES;
S1 POWER OFF — ON
S2 RELAY
S3 AC VOLTAGE SELECTOR (1)220V (2)240V
S4 A/M OFF — ON
S5 FM OFF — ON
S6 PHONO 1 OFF — ON
S7 PHONO 2/MIC OFF — ON
S8 AUX OFF — ON
S9 TAPE MONITOR 1 OFF — ON
S10 TAPE MONITOR 2 OFF — ON
S11 TAPE DUPLICATE OFF — ON
S12 ADAPTOR OFF — ON
S13 MODE STEREO — MONO
S14 MUTING OFF — -20dB
S15 LOUDNESS OFF — ON
S16 TONE OFF — ON
S17 LOW FILTER OFF — 30Hz
S18 HIGH FILTER OFF — 8kHz
S19 SPEAKER A OFF — ON
S20 SPEAKER B OFF — ON
S21 SPEAKER C OFF — ON
S22 FM MUTING OFF — ON
S23 FM MULTIPATH OFF — ON
S24 REED RELAY
S25 RELAY
RESISTOR ; IN OHM, 1/4W ±5% TOLERANCE UNLESS OTHERWISE NOTED K : kΩ M : MΩ
CAPACITORS ; N:nF UNLESS OTHERWISE NOTED P : pF
SIGNAL VOLTAGE AT SPEAKER OUTPUT 38V/8Ω 1kHz
DC CURRENT AT NO INPUT SIGNAL
DC VOLTAGE AT NO INPUT SIGNAL

15.2 SCHEMATIC DIAGRAM FOR SX-1250/S

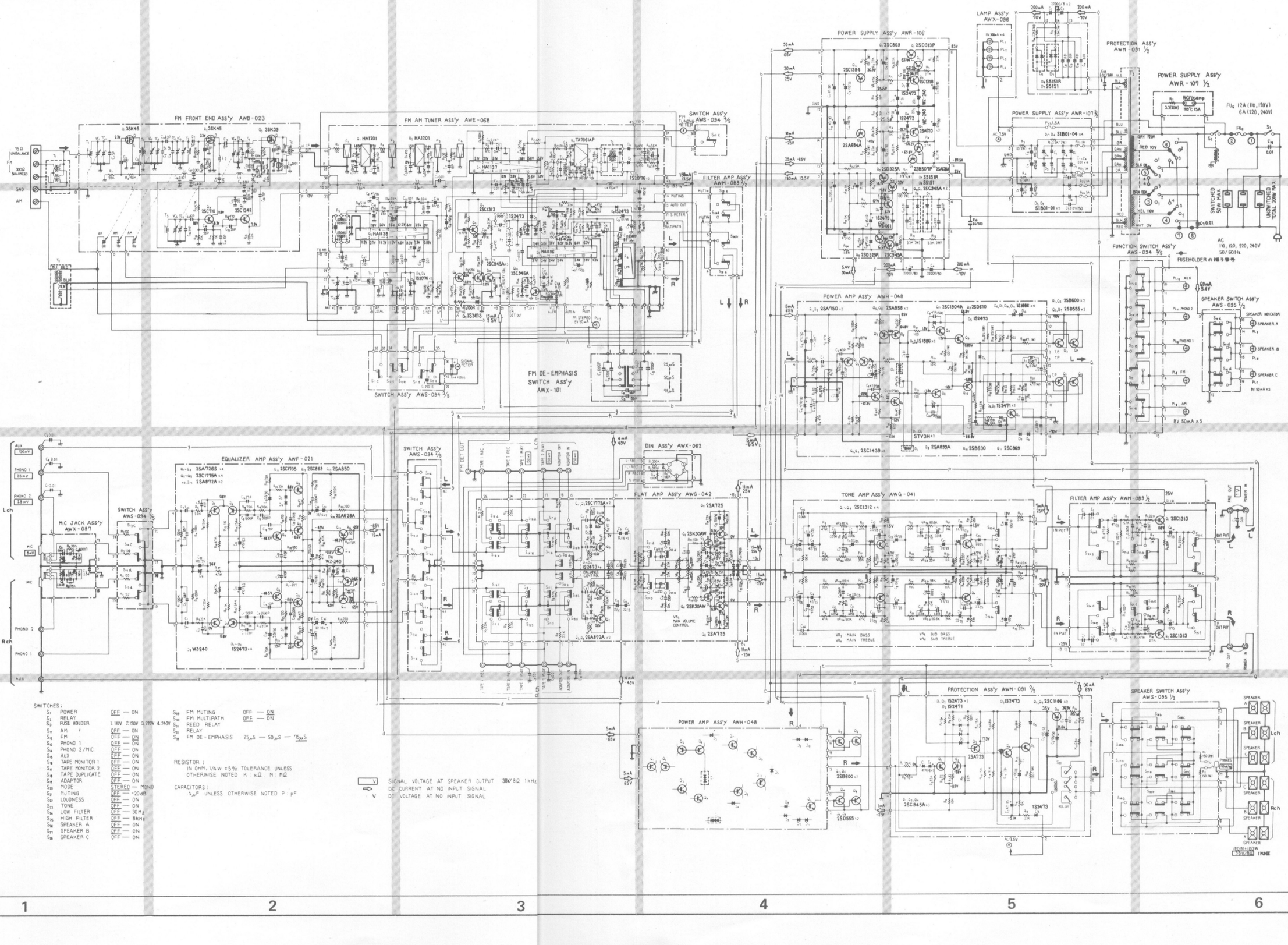
FM FRONT END ASS'y AWB-023
FM AM TUNER ASS'y AWE-068
SWITCH ASS'y AWS-094 3/5
FILTER AMP ASS'y AWH-089 1/2
POWER SUPPLY ASS'y AWR-106
LAMP ASS'y AWX-096
PROTECTION ASS'y AWM-051 1/2
POWER SUPPLY ASS'y AWR-107 1/2
POWER SUPPLY ASS'y AWR-107 1/2
FUNCTION SWITCH ASS'y AWS-034 3/5
FUSEHOLDER の端子番号
POWER AMP ASS'y AWH-048
SPEAKER SWITCH ASS'y AWS-095 1/2
FM DE-EMPHASIS SWITCH ASS'y AWX-101
SWITCH ASS'y AWS-094 3/5
DIN ASS'y AWX-062
FLAT AMP ASS'y AWG-042
TONE AMP ASS'y AWG-041
FILTER AMP ASS'y AWH-089 1/2
EQUALIZER AMP ASS'y AWF-021
SWITCH ASS'y AWS-094 1/5
MIC JACK ASS'y AWX-097
POWER AMP ASS'y AWH-048
PROTECTION ASS'y AWM-091 2/2
SPEAKER SWITCH ASS'y AWS-095 1/2
SWITCHES:
S1 POWER OFF — ON
S2 RELAY
S3 FUSE HOLDER L 110V 2 120V 3 220V 4 240V
S4 AM OFF — ON
S5 FM OFF — ON
S6 PHONO 1 OFF — ON
S7 PHONO 2/MIC OFF — ON
S8 AUX OFF — ON
S9 TAPE MONITOR 1 OFF — ON
S10 TAPE MONITOR 2 OFF — ON
S11 TAPE DUPLICATE OFF — ON
S12 ADAPTOR OFF — ON
S13 MODE STEREO — MONO
S14 MUTING OFF — -20dB
S15 LOUDNESS OFF — ON
S16 TONE OFF — ON
S17 LOW FILTER OFF — 30Hz
S18 HIGH FILTER OFF — 8kHz
S19 SPEAKER A OFF — ON
S20 SPEAKER B OFF — ON
S21 SPEAKER C OFF — ON
S22 FM MUTING OFF — ON
S23 FM MULTIPATH OFF — ON
S24 REED RELAY
S25 RELAY
S26 FM DE-EMPHASIS 25μS — 50μS — 75μS
RESISTOR: IN OHM, 1/4W ±5% TOLERANCE UNLESS OTHERWISE NOTED K: kΩ M: MΩ
CAPACITORS: μF UNLESS OTHERWISE NOTED P: pF
SIGNAL VOLTAGE AT SPEAKER OUTPUT 38W/8Ω 1kHz
DC CURRENT AT NO INPUT SIGNAL
DC VOLTAGE AT NO INPUT SIGNAL

15.4 DE-EMPHASIS SWITCH ASSEMBLY (AWX-101, for S type)

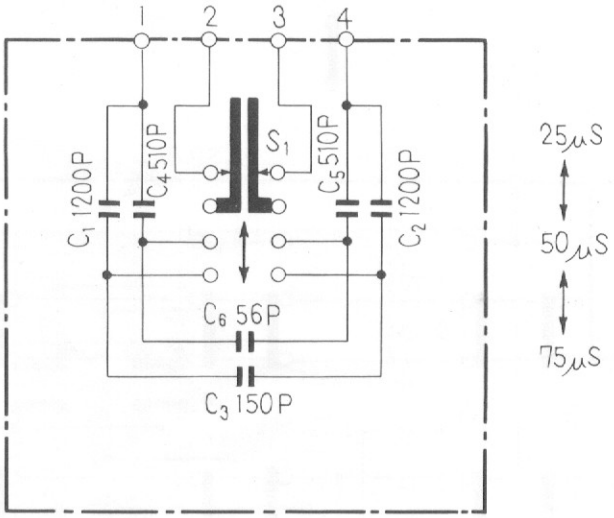

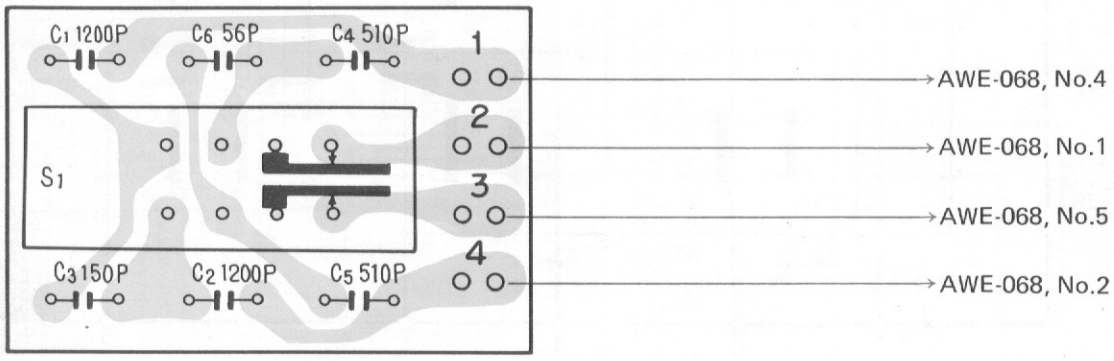

Parts List of De-emphasis Switch Assembly (AWX-101, for S type)

Symbol	Description			Part No.
S1	Slide switch (DE-EMPHASIS)			ASH-017
C1	Ceramic	1200p	50V	CKDYA 122J 50
C2	Ceramic	1200p	50V	CKDYA 122J 50
C3	Ceramic	150p	50V	CCDSL 151K 50
C4	Polystyrene	510p	50V	CQSA 511J 50
C5	Polystyrene	510p	50V	CQSA 511J 50
C6	Ceramic	56p	50V	CCDSL 560K 50

15.5 SPEAKERS SWITCH ASSEMBLY (AWS-098, for HG type)

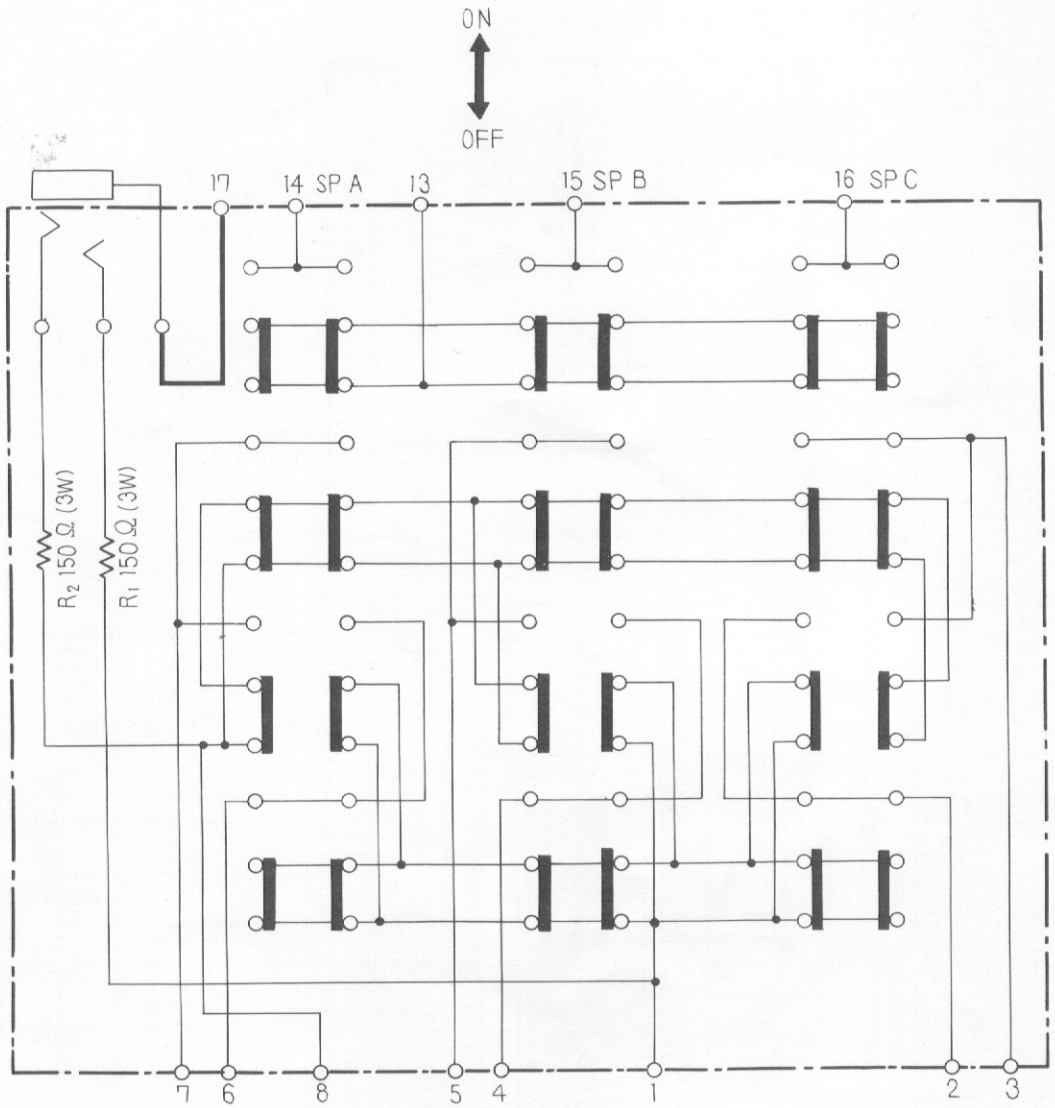

Parts List of Speaker Switch Assembly (AWS-098, for HG type)

Symbol	Description	Part No.
S1	Push switch (SPEAKERS)	ASG-100
R1	Metal oxide resistor 150 3W	RS3P 151K
R2	Metal oxide resistor 150 3W	RS3P 151K
	Phone jack (PHONES)	AKN-010

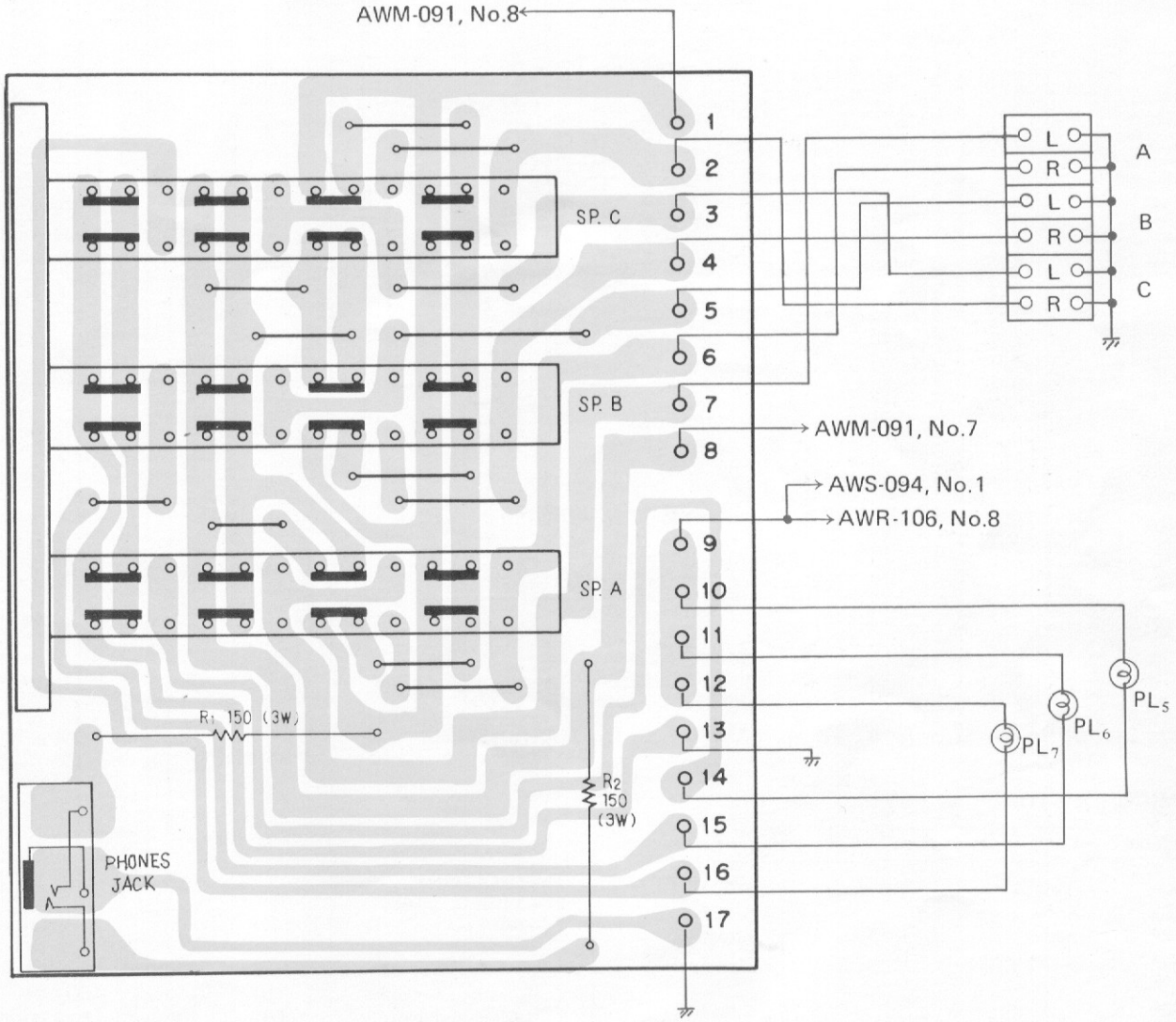
AWM-091, No.8
1
2
3
4
5
6
7
8
9
10
11
12
13
14
15
16
17
SP. C
SP. B
SP. A
L
R
L
R
L
R
A
B
C
AWM-091, No.7
AWS-094, No.1
AWR-106, No.8
PL5
PL6
PL7
R1 150 (3W)
R2
150
(3W)
PHONES
JACK

15.6 POWER SUPPLY ASSEMBLY (AWR-108, for HG type)

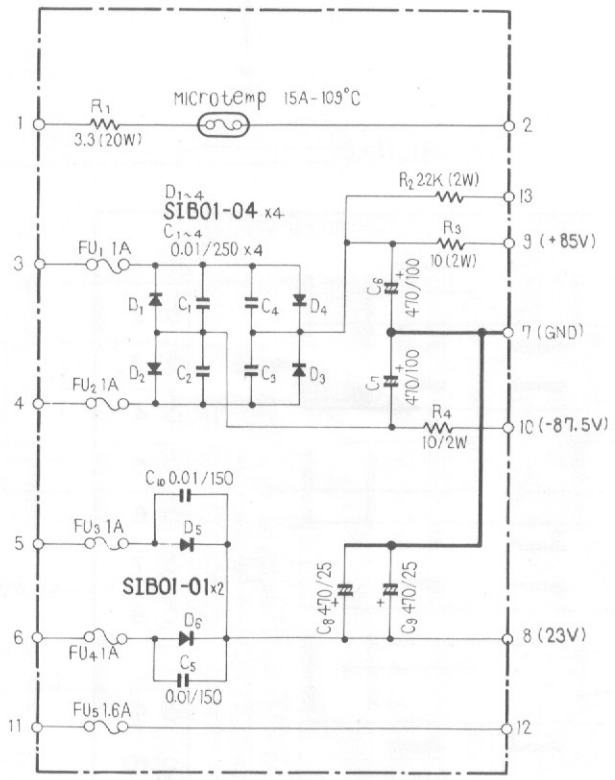

Parts List of Power Supply Assembly (AWR-108, for HG type)

SEMICONDUCTORS

Symbol	Description	Part No.
D1	Diode	SIB01-04
D2	Diode	SIB01-04
D3	Diode	SIB01-04
D4	Diode	SIB01-04
D5	Diode	SIB01-01 (IS1885)
D6	Diode	SIB01-01 (IS1885)

RESISTORS

Symbol	Description			Part No.
R1	Wire wound	3.3	20W	ACN-003
R2	Metal oxide	2.2k	2W	RS2P 222J
R3	Metal oxide	10	2W	RS2P 100K
R4	Metal oxide	10	2W	RS2P 100K

CAPACITORS

Symbol	Description			Part No.
C1~C4	Ceramic	0.01	250V	ACG-001
C5	Ceramic	0.01	150V	ACG-004
C6	Electrolytic	470	100V	CEB 471P 100
C7	Electrolytic	470	100V	CEB 471P 100
C8	Electrolytic	470	25V	CEA 471P 25
C9	Electrolytic	470	25V	CEA 471P 25
C10	Ceramic	0.01	150V	ACG-004

OTHERS

Symbol	Description	Part No.
	Microtemp	AEX-005
	Fuse clip	AKR-010

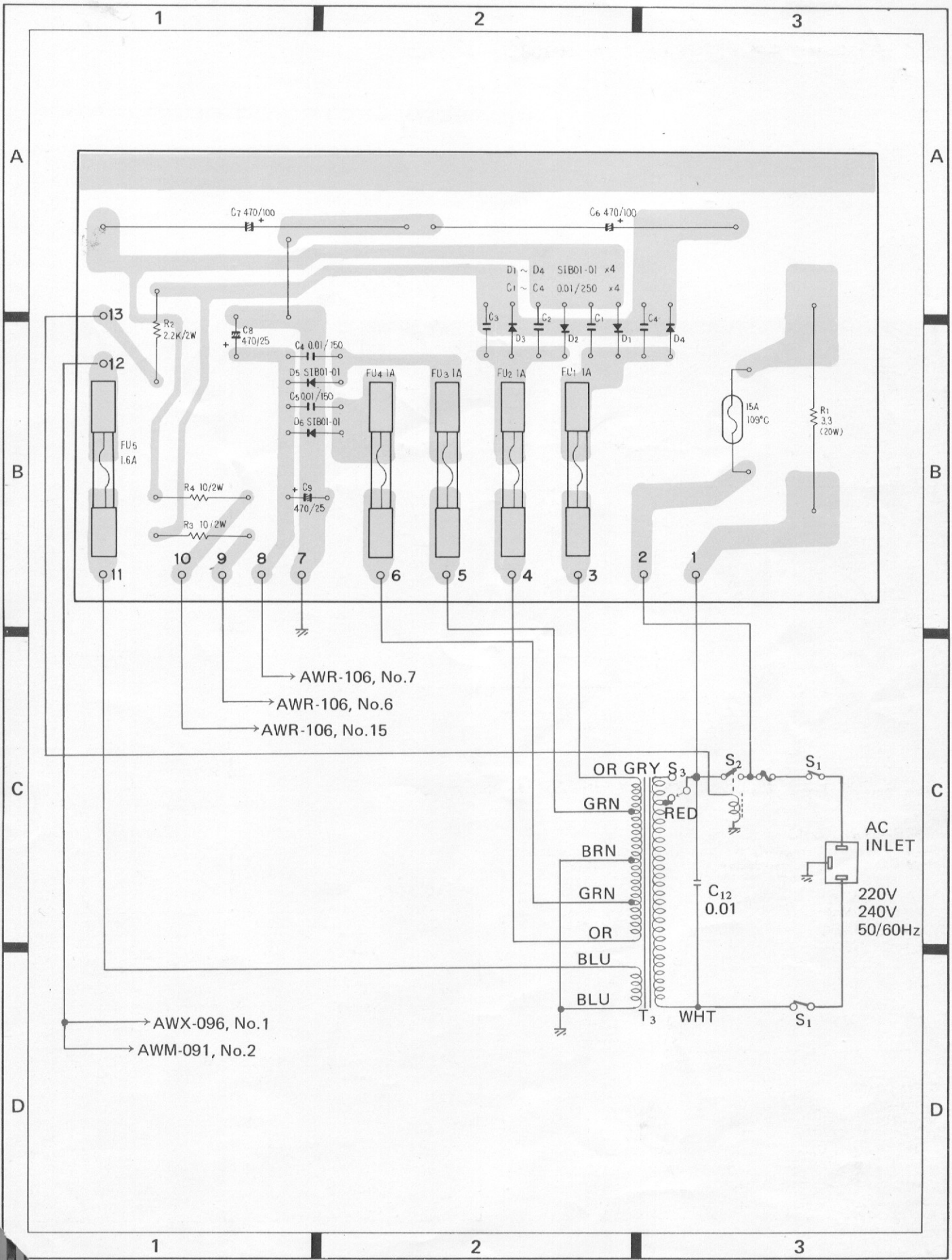
1
2
3
A
B
C
D
C7 470/100
C6 470/100
D1 ~ D4 SIB01-01 ×4
C1 ~ C4 0.01/250 ×4
C3
C2
C1
C4
D3
D2
D1
D4
13
12
R2 2.2K/2W
C8 470/25
C4 0.01/150
D5 SIB01-01
C5 001/150
D6 SIB01-01
FU4 1A
FU3 1A
FU2 1A
FU1 1A
15A 109°C
R1 3.3 (20W)
FU5 1.6A
R4 10/2W
R3 10/2W
C9 470/25
11
10
9
8
7
6
5
4
3
2
1
AWR-106, No.7
AWR-106, No.6
AWR-106, No.15
OR GRY
GRN
BRN
GRN
OR
BLU
BLU
RED
WHT
S3
S2
S1
S1
C12 0.01
T3
AC INLET
220V
240V
50/60Hz
AWX-096, No.1
AWM-091, No.2